QX BATHROOM PRODUCTS

A Division of Qualitex Supplies

The Complete Bathroom Brand

January 2023 Edition

QX BATHROOM PRODUCTS

The Complete Bathroom Brand

QUALITY GUARANTEE QX

Proud to have been supporting professional Merchants and Bathroom Showrooms for over 30 Years

Qualitex Supplies was incorporated in October 1990 in Aylesford, Kent by husband and wife Duncan and Carolyn Andrews, as a wholesaler and distributor of bathroom products. Thirty Three years on, the company remains privately owned with a strong family feel, continued by the second generation and many long-serving and experienced members of staff.

The founders three children; Graeme, Scott and Olivia are now directing the exciting future of the exclusive QX Bathroom Products range as Directors and Shareholders.

The QX Bathroom Brand has significantly increased in popularity during recent years with the introduction of a complete bathroom concept of quality and design-led new product ranges, with our Genesis and Ascent brands offering unbelievable value for money in a 'Good, Better, Best' product offering to cover all tastes and specific price budgets.

The January 2023 brochure release is the first of three for 2023 and showcases a number of new products, new finishes and new designs. The front cover provides an insight into how our brushed brass taps, valves and enclosures can be combined with our Monica Forest Green furniture and brand new Aveiro sanitaryware, to provide a modern, classy and clean cut bathroom setting. The back cover introduces the Evora furniture. Further developing our linear offering, the Evora furniture exudes class and sophistication. Available in both White and Platinum finishes, and utilising existing basins this is a practical yet stylish furniture set.

The Evora range is extended to include both sanitaryware and taps. With a full range available from Close Coupled to Wall Hung pans, the Evora sanitaryware offers plenty of style at a competitive price point, while the Evora taps welcome the introduction of on/off push buttons which have grown in popularity within the showering market.

This brochure launch also sees the introduction of two further tap ranges. The Estoril offers a modern twist on an already popular design, and the Aveiro which looks at home within both square and round design schemes.

The Estoril range also sees a full complement of sanitaryware added within this brochure. Focusing on the ever popular comfort market, the Estoril range includes raised height options in open back, closed back and back to wall pan.

Further introductions within the furniture collection sees the Geo featured for the first time. With a Matt Black carcass and a Geometric Matt Black drawer front, the combination offers a real wow factor. The Sofia has also been launched within the Ascent furniture range and welcomes back textured wood finishes to our offering. Finished in Nebraska Oak, with contrasting black handles, the look and feel of this unit adds depth and warmth to the bathroom design.

An important introduction to the bathing section is the Iowa shower bath. With space often at a premium, this design allows for the bath to be installed with standard bath panels and screens, but facilitates an extended showering area at one end of the bath.

The Qualitex reputation for supplying quality, tried and tested products at affordable prices, is one of the reasons behind the success story, which has seen sales in excess of £350 million since the company opened.

We have two regional distribution centres providing 100,000 square feet of storage, allowing for delivery across the UK, generally available for next day delivery from a fleet of 25 delivery vehicles. We employ over 85 staff who strive to offer the best possible service throughout every department.

We have extended our Customer Service offering over recent years with our ability to resolve any questions, issues or spare parts requests quickly and efficiently in-house.

We want consumers to be pleased with their purchase and recommend our products and services to their friends and relations. We feel extremely confident that you will find our products and services everything that you would expect from a market leader.

GRAND HOME BATHROOMS

ascent

GENESIS

Proud Supporters Of

SarcoidosisUK

In Memory of Carolyn Andrews

NOTE: QX images must not be used without written approval and specific terms agreed.

Red pricing in this brochure denotes products also available in the Genesis Brochure

Contents

The Trusted Brand for Quality, Value for Money & Customer Satisfaction

BATHROOM SUITES

4 WC'S at a Glance
8 Seville
10 NEW Aveiro Rimless
12 NEW Aveiro Rimless Wall-Hung
14 NEW Estoril Comfort Rimless
16 NEW Evora Rimless
18 Crea Round Rimless
20 Rimini Rimless Wall-Hung
22 Rimini Rimless
24 Monza Rimless
26 Monza Rimless Back-to-Wall
28 Verona Rimless Wall-Hung
30 Verona Rimless
32 Venice Rimless
34 Venice Rimless Back-to-Wall
36 Ritz Rimless
38 Oregon Rimless Open-Back
40 Oregon Rimless Back-to-Wall
42 Charlotte
44 Cornell Comfort Rimless
46 Arizona
47 Arizona Back-to-Wall
48 Eton Rimless
50 Grosvenor
52 Grosvenor Low Level
53 Grosvenor High Level
54 Classic Nouveau
55 Eden
56 Nevada Back-to-Wall
57 Nevada
58 Carolina
59 Carolina Wall-Hung
60 Ebony
61 Solo

BASINS, BACK-TO-WALL PANS, CISTERNS & SEATS

62 Contract 4-Pieces
63 Comfort Options
66 Cloakroom Options
67 Vanity Basins
70 Cloakroom Basins
71 Corner & Semi-Recessed Basins
73 Back-to-Wall Pans
75 Wall-Hung Pans & Bidets
76 Plastic Cisterns & WC Seats
77 Ascent Plastic Cistern Options
78 Aqua WC Frame & Flush Button Options

TAPS & ACCESSORIES

79 NEW Aveiro Taps
80 NEW Estoril Taps
81 NEW Evora Taps
82 Empress Taps
83 Grosvenor Taps
84 Roma Taps
86 Arizona Taps
87 Kansas Taps
88 Tuscany Taps
89 Atlanta Taps
90 Charlotte Taps
91 Urban Taps
92 Nigella Taps
93 Opal Taps
94 Harmony Taps
95 Nostalgic Taps
96 Classic Nouveau Taps
97 Rimini & Vermont Taps
98 Ohio Taps
100 Ebony Taps
101 Montana Taps
102 Belmont Taps & Venice Taps
103 Nevada Taps
104 Edwardian Taps
105 Victorian Taps
106 Karma & Ebony Taps
107 Exofills & Waste Options
108 Tap Wastes & Accessories
109 Grosvenor Accessories
110 Ohio Accessories
111 Utah Accessories
113 Kansas Accessories
114 Alpha Accessories
115 Comfort Accessories

Contents

The Trusted Brand for Quality, Value for Money & Customer Satisfaction

BATHS, WHIRLPOOLS & FREESTANDING BATHS

118 Carolina & Ebony
119 Dakota & Virginia
120 Alaska & Arizona
121 Montana & Nevada
122 Eden, Indiana & Oklahoma
123 Deco, Alabama & Nebraska
124 Bath Panel Options
125 Kansas & Kansas Offset
126 California Shower Bath
127 Vermont Shower Bath
128 Shower Bath Screen Options
129 NEW Iowa Shower Bath
130 Missouri & Colorado
131 Idaho & Tennessee
132 Whirlpool Options
141 Copenhagen & Helsinki
142 Oslo & Lisbon
143 Milan & Seville
144 Grande Home Airspa System
145 Sofia & Whirlpool System
146 Porto & Vienna
147 Icon & Estoril
148 Evora & Aveiro
149 Ritz & Metropolitan
150 Roma & Valentina
151 Venice & Opal
152 Oregon & Rimini
153 Grosvenor & Stanford
154 Cornell & Monza
155 Como Offset Corner & Verona
156 Latina & Marino
157 Romeo, Diana, Oxford & Harvard
158 Iconic Bath Feet & Waste Options
159 Freestanding Tap Options

BATH SCREENS, SHOWER ENCLOSURES & TRAYS

161 Curved Bath Screens
162 Black & Brass Framed Screens
163 Square & Over-Bath Screens
164 Genesis Sail Bath Screens
165 Ascent Sail Bath Screens
166 Ascent Radius & Square Screens
167 Genesis Deluxe Square 2-Fold Screen
168 Genesis 2-Fold Screen
169 Genesis 3-Fold & 4-Fold Screens
170 Classic 2-Fold Screen
171 Classic 3-Fold & 4-Fold Screens
172 Ascent 10 Walk-In Enclosure
173 Ascent 10 Hinged Door & Inline
176 Ascent 10 Quadrant
177 Ascent 10 Sliding Door
178 Ascent Premier Hinged & Inline
179 Ascent Premier Hinged Quadrant
180 Ascent Premier Roller Quadrant
182 Ascent Premier Roller Slider
184 Ascent Premier 'D' Shaped Enclosure
185 Ascent Premier Pentangle Enclosure
186 Ascent Infold & Hinged Enclosures
187 Ascent Sliding Door & Side Panels
188 Ascent Quadrant Enclosures
189 Nostalgic Pivot Door
190 Classic Nouveau Pivot & Bifold Doors
191 Classic Nouveau Sliding Door & Side Panels
192 Classic Nouveau Quadrant Enclosures
193 Classic Nouveau 'D' Shaped & Pentangle
194 Classic Nouveau Single Door Quad & Corner Entry Enclosure
195 Classic Nouveau Showerwall
196 Genesis Pivot & Bifold Doors
197 Genesis Sliding Door & Side Panels
198 Genesis Quadrant Enclosures
199 Genesis 1-Door Quadrant & 'D' Shaped
200 Genesis Corner Entry Enclosure
201 Genesis Showerwall - Smoked Glass
202 Genesis Showerwall - Brass Frame
203 Genesis Showercall - Clear Glass
204 Genesis Curved Showerwall
205 Genesis Walk-In Enclosure
206 Alpha Pivot & Sliding Doors
207 Alpha Quadrants & Walk-In Panels
208 Ascent Premier 35mm Stone Trays
209 Ascent Premier 30mm Trays
211 Ascent Premier 30mm Linear Trays
212 Genesis Anti-Slip 40mm Trays
214 Genesis 40mm Trays
216 QX 80mm Trays
217 Genesis & QX Tray Specs
218 Wetroom Trays

Contents

The Trusted Brand for Quality, Value for Money & Customer Satisfaction

SHOWER KITS & BATHROOM PANELS

224 Ascent Round Shower Kit Combinations
226 Ascent Square Shower Kit Combinations
228 Utah Black Shower Kit Combinations
229 Ascent Thermostatic & Manual Shower Kits
230 Genesis Thermostatic & Manual Shower Kits
231 Atlanta Brushed Brass Thermostatic Shower Kits
232 Utah Black & Roma Grey Thermostatic Shower Kits
233 Nostalgic Shower Valves & Kits
235 Gemini & Rimini Push-Button Shower Valves
236 Ebony & Utah Black Shower Valves
237 Concealed & Exposed Valves
238 Exposed Thermostatic Valves & Bath Shower Mixers
239 Riser Kit Options
240 Shower Head Options
241 Shower Kit Ancillary Items
242 Shower Columns
251 Decorative Wall Panelling

FURNITURE & MIRRORS

256 Naxos
258 Vienna
260 Belmont
262 Tuscany
264 Rimini
267 Nostalgic & Deco Wall-Hung
268 Stamford
272 Aston
274 Kansas
275 Porto
276 Pisa
278 NEW Geo
279 NEW Sofia
280 NEW Evora
281 NEW Sintra
282 Radius
283 Venice
284 Cornell
286 Roma
288 Eton
290 Oxford
291 Opal
294 Oregon
298 Monza
299 Vermont
300 Gemini
302 Modena
304 Zeto
306 Douro
308 Milan
309 Urban
315 Eden
328 Monica
338 Richmond
342 Genesis Q-Line
354 Ritz
358 Standard Mirrored Cabinets
361 Standard Mirrors & Light Options
369 Mirrored Cabinets with Lights
378 Aluminium Mirrors & Cabinets

TOWEL RAILS

380 Electric Towel Rails & Elements
383 Ladder Rails
386 Stainless Steel Rails
387 Designer Towel Rails
403 Traditional Rail

Suites & Sanitaryware

The QX Bathroom Suite range has never been greater with so many fantastic designs and options available to satisfy your specific taste and size of bathroom, all providing great quality, specification and value for money, and available with soft close and easy release seats for your comfort.

Rimless technology continues to gain in popularity and we offer many different WC options with rimless designs. Not only do these designs offer improved flushing capabilities, they are also far easier to keep clean and hygienic.

We also offer a number of short projection options for smaller bathrooms or when space is more crucial, as well as additional back-to-wall and wall-hung pans to cater for more minimalistic designs.

Recent trends have seen the comfort height and tall pans grow in popularity. Our NEW Evora, Aveiro and Estoril ranges bring style and versatility together, with complete Close Coupled, Back-To-Wall and Wall Hung options available. All featuring Rimless technology and soft close seats as standard.

WC's At A Glance

Price is for Close Coupled WC Suite including Seat

VALUE SUITE

Ebony - p60
£164.00 Exc. VAT **£196.80 Inc. VAT**
Priced with Ebony Standard Seat

Solo - See p61
£278.00 Exc. VAT **£333.60 Inc. VAT**
Priced with Ebony Standard Seat

Carolina - See p58
£272.00 Exc. VAT **£326.40 Inc. VAT**

WRAS

SHORT PROJECTION

Eton Open Sided - See p48
£276.00 Exc. VAT **£331.20 Inc. VAT**

RIMLESS

Carolina Elevated Height - See p64
£297.00 Exc. VAT **£356.40 Inc. VAT**

COMFORT HEIGHT PAN

Classic Nouveau - See p54
£305.00 Exc. VAT **£366.00 Inc. VAT**
Priced with QX Wood Moulded Seat

WC's At A Glance

Price is for Close Coupled WC Suite including Seat

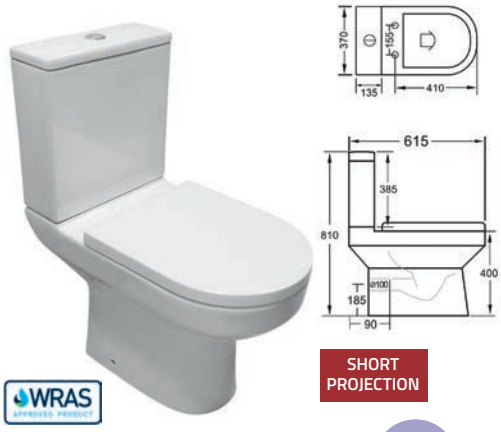

SHORT PROJECTION

NEW Evora Open - See p16
£316.00 Exc. VAT **£379.20 Inc. VAT**
RIMLESS

SHORT PROJECTION

Nevada - See p57
£321.00 Exc. VAT **£385.20 Inc. VAT**

SHORT PROJECTION

Venice Open - See p32
£325.00 Exc. VAT **£390.00 Inc. VAT**
RIMLESS

Verona Closed* - See p30
£328.00 Exc. VAT **£393.60 Inc. VAT**
*Exposed Inlet
RIMLESS

Verona Open Sided - See p30
£329.00 Exc. VAT **£394.80 Inc. VAT**
RIMLESS

Venice Closed* - See p32
£330.00 Exc. VAT **£396.00 Inc. VAT**
*Exposed Inlet
RIMLESS

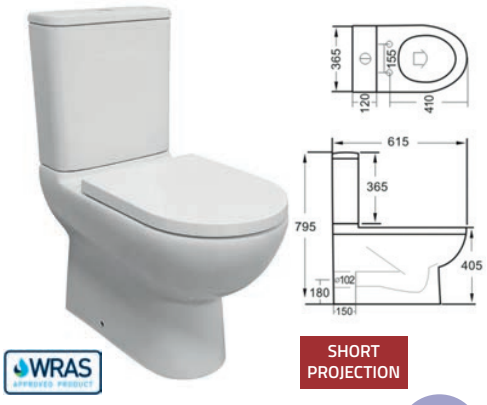

SHORT PROJECTION

Eton Closed Sided - See p48
£335.00 Exc. VAT **£402.00 Inc. VAT**
RIMLESS

Arizona - See p46
£348.00 Exc. VAT **£417.60 Inc. VAT**

SHORT PROJECTION

Eden - See p55
£350.00 Exc. VAT **£420.00 Inc. VAT**

WC's At A Glance

Price is for Close Coupled WC Suite including Seat

Charlotte - See p42
£354.00 Exc. VAT **£424.80 Inc. VAT**

NEW Estoril Tall Open - See p14
£354.00 Exc. VAT **£424.80 Inc. VAT**
RIMLESS

COMFORT HEIGHT PAN

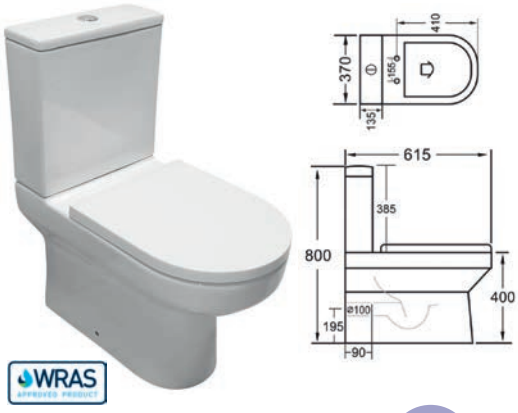

NEW Evora Closed - See p16
£354.00 Exc. VAT **£424.80 Inc. VAT**
RIMLESS

Rimini - See p22
£357.00 Exc. VAT **£428.40 Inc. VAT**
RIMLESS

Comfort - See p64
£359.00 Exc. VAT **£430.80 Inc. VAT**
Priced with Ebony Soft Close Seat

COMFORT HEIGHT PAN

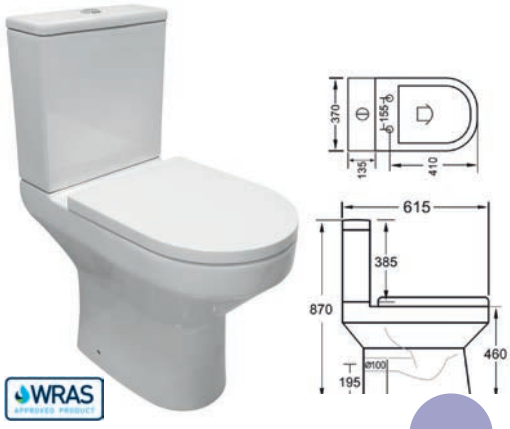

NEW Evora Tall Open - See p16
£363.00 Exc. VAT **£435.60 Inc. VAT**
RIMLESS

COMFORT HEIGHT PAN

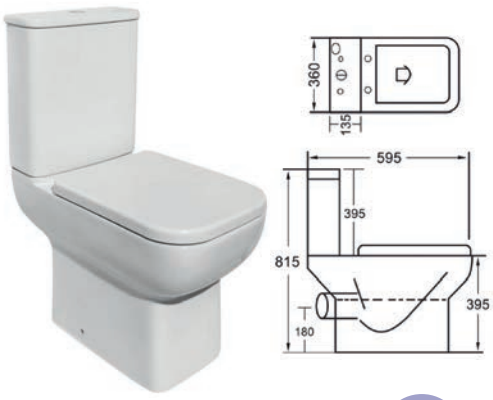

NEW Aveiro Open - See p10
£367.00 Exc. VAT **£440.40 Inc. VAT**
RIMLESS

Oregon Open-Sided - See p38
£368.00 Exc. VAT **£441.60 Inc. VAT**
RIMLESS

Cornell Elevated Height - See p44
£391.00 Exc. VAT **£469.20 Inc. VAT**
RIMLESS

COMFORT HEIGHT PAN

WC's At A Glance

Price is for Close Coupled WC Suite including Seat

WRAS

RIMLESS

NEW Aveiro Tall Open - See p10
£395.00 Exc. VAT **£474.00 Inc. VAT**

COMFORT HEIGHT PAN

RIMLESS

Oregon Elevated Height - See p64
£400.00 Exc. VAT **£480.00 Inc. VAT**

COMFORT HEIGHT PAN

WRAS

RIMLESS

NEW Estoril Tall Closed - See p14
£406.00 Exc. VAT **£487.20 Inc. VAT**

COMFORT HEIGHT PAN

RIMLESS

Ritz - See p36
£423.00 Exc. VAT **£507.60 Inc. VAT**

RIMLESS

Rimini Elevated Height - See p22
£441.00 Exc. VAT **£529.20 Inc. VAT**

COMFORT HEIGHT PAN

RIMLESS

Roma Elevated Height - See p8
£456.00 Exc. VAT **£547.20 Inc. VAT**

COMFORT HEIGHT PAN

Grosvenor - See p50
£468.00 Exc. VAT **£561.60 Inc. VAT**

Priced with the Nostalgic Soft Close Seat

WRAS

RIMLESS

Monza - See p24
£539.00 Exc. VAT **£646.80 Inc. VAT**

RIMLESS

Crea Round - See p18
£600.00 Exc. VAT **£720.00 Inc. VAT**

Rimless Technology

Many of our close coupled and back-to-wall pans offer Rimless technology as standard. This system improves water flow around the bowl and allows for easier cleaning. Look out for the Rimless icon on relevant products.

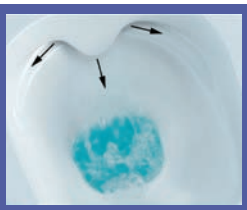

RIMLESS

Roma Rimless Comfort Height
Back-to-Wall Pan & Soft Close Seat

Porto 60 Base Unit - Shown Wall-Hung

Total Suite Price:	£6,600.00 Exc. VAT	**£7,920.00 Inc. VAT**

Seville

Bath Components	Dimensions	Ref.	Exc. VAT	Inc. VAT
Seville Freestanding Bath - Black	1800 x 800mm	PB288-C	£2,282.00	**£2,738.40**
Seta Freestanding Bath Shower Mixer	-	DG6283-354	£873.00	**£1,047.60**

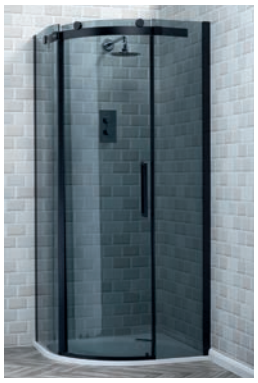

*Enclosure supplied Right Hand Only

Shower Enclosure Components	Dimensions	Ref.	Exc. VAT	Inc. VAT
Ascent Premier Roller Quadrant Enclosure RH* - Smoked Glass	900mm x 900mm x 2000mm (H)	PR404QUBB	£953.00	**£1,143.60**
Ascent Premier 30mm Tray	900mm Quad	ASC900Q	£239.00	**£286.80**
Ascent 90mm Shower Waste	-	TAST1CP-K	£13.00	**£15.60**
Ohio Twin Thermostatic Shower Valve with 1 Outlet	-	QX-OH-TW1W	£194.00	**£232.80**
Ohio Round Shower Head	-	FLS-8002C	£56.00	**£67.20**
Ohio Shower Head Fixing Arm	-	FLS-801C	£47.00	**£56.40**

Furniture Components

Porto 60 Base Unit - Matt Black/Sonoma Oak
Ref: POR60BU — Dimensions: 600 x 460 x 400
£684.00 Exc. VAT — **£820.80 Inc. VAT**

Porto 60 Reversible Worktop - Matt Black/Sonoma Oak
Ref: POR60WT — Dimensions: 610 x 460
£89.00 Exc. VAT — **£106.80 Inc. VAT**

Porto 60 Furniture Framework - Black
Ref: PORFRM — Dimensions: 600 x 460 x 400
£522.00 Exc. VAT — **£626.40 Inc. VAT**

Aston Ceramic Vanity Basin - 1TH
Ref: CB102 — Dimensions: 415 x 415mm
£85.00 Exc. VAT — **£102.00 Inc. VAT**

Kansas Basin Mono inc. Click-Clack Waste
Ref: ASC-9952BW
£107.00 Exc. VAT — **£128.40 Inc. VAT**

RIMLESS

630mm Projection

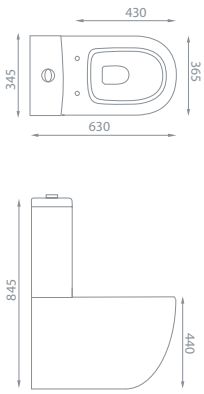

WC Components

Roma Rimless Comfort Close Coupled Pan & Soft Close Seat
Ref: RO-W158
£336.00 Exc. VAT — **£403.20 Inc. VAT**

Roma Close Coupled Cistern & Fittings
Ref: RO-T158
£120.00 Exc. VAT — **£144.00 Inc. VAT**

Total Suite Price	£6,600.00 Exc. VAT	£7,920.00 Inc. VAT

Also Shown With:	Dimensions	Ref.	Exc. VAT	Inc. VAT
Utah 60 Mirror with Black Frame & Integrated Lights	600 x 700 x 30mm	ASC6071B	£273.00	**£327.60**
Porto Ceramic Basin - For use with the Porto Base Unit	600 x 460mm	CB5460	£169.00	**£202.80**
Opal Nickel Towel Rail - Black Nickel Finish	1200 x 500mm	OP-12X5BN	£463.00	**£555.60**

Monza Shower Column with Rainfall Head

Gemini 2-Drawer Base Unit - Pearl Grey Finish

Total Suite Price:	£2,763.00 Exc. VAT	**£3,315.60 Inc. VAT**

NEW Aveiro Rimless

10 YEAR MANUFACTURERS GUARANTEE

Ascent 10 Walk-In Panels available from 760mm - 1600mm

Ascent Wetroom Trays available from p218

Shower Enclosure Components	Dimensions	Ref.	Exc. VAT	Inc. VAT
Ascent 10 Walk-In Front Panel	1600 x 2000mm (H)	ASC657SS	£616.00	**£739.20**
Zonda Linear Drain - Stainless Steel in Mirror Finish	600mm	ZON600	£290.00	**£348.00**
Monza Shower Column - Stainless Steel in Mirror Finish	800mm Depth	SO2800	£721.00	**£865.20**

Furniture Components

Gemini 60 2-Drawer Base Unit - Pearl Grey
Ref: GM60PG Dimensions: 590 x 455 x 500mm
£482.00 Exc. VAT **£578.40 Inc. VAT**

Gemini 60 Resin Basin
Ref: GM60BS Dimensions: 600 x 460mm
£204.00 Exc. VAT **£244.80 Inc. VAT**

Urban Basin Mono inc. Click-Clack Waste
Ref: ALP-9072W
£83.00 Exc. VAT **£99.60 Inc. VAT**

595mm Projection

SHORT PROJECTION

RIMLESS

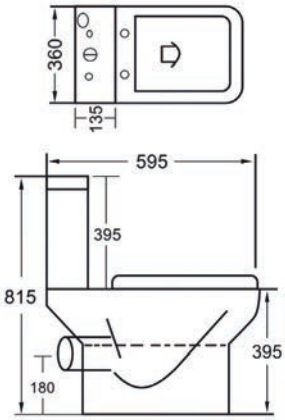

WC Components

NEW Aveiro Rimless Close Coupled Open Sided Pan & Soft Close Seat
Ref: AVE-W506C
£267.00 Exc. VAT **£320.40 Inc. VAT**

NEW Aveiro Close Coupled Cistern & Fittings
Ref: AVE-C506
£100.00 Exc. VAT **£120.00 Inc. VAT**

WRAS

Total Suite Price	£2,763.00 Exc. VAT	£3,315.60 Inc. VAT

Also Available:	Ref.	Exc. VAT	Inc. VAT
NEW Aveiro Rimless Tall Close Coupled Open Sided Pan & Soft Close Seat	AVE-W206C	£295.00	**£354.00**
NEW Aveiro Close Coupled Cistern & Fittings	AVE-C506	£100.00	**£120.00**
NEW Aveiro Rimless Back-to-Wall Pan & Soft Close Seat	AVE-W513C	£267.00	**£320.40**
NEW Aveiro Rimless Tall Back-to-Wall Pan & Soft Close Seat	AVE-W208C	£291.00	**£349.20**
NEW Aveiro Rimless Wall-Hung Pan & Soft Close Seat	AVE-W507C	£281.00	**£337.20**

Monica 120 1-Piece Combination in Forest Green - See p334

Atlanta Basin Mono in Brushed Brass Finish

Total Suite Price:	£2,053.00 Exc. VAT	**£2,463.60 Inc. VAT**

NEW Aveiro Rimless Wall-Hung

10 YEAR MANUFACTURERS GUARANTEE

Shower Enclosure Components	Dimensions	Ref.	Exc. VAT	Inc. VAT
Genesis 800mm Showerwall Panel - Brushed Brass	800 x 1950mm (H)	QXGSW800BRS	£409.00	£490.80
Ascent Premier 30mm Cast Stone Tray	1200 x 800mm	ASC12/8	£272.00	£326.40
Ascent 90mm Shower Trap Waste	-	TAST1CP-K	£13.00	£15.60
Atlanta Square Thermostatic Bar Valve & Riser Kit - Brushed Brass	850-1200mm (H)	AT103BB	£419.00	£502.80

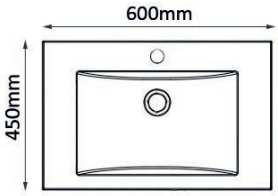

Furniture Components

Monica 60 2-Door Base Unit - Forest Green
Ref: M60BFG Dimensions: 590 x 450 x 800mm
£243.00 Exc. VAT **£291.60 Inc. VAT**

2 x Q-Line Slim D Handles - Brushed Brass Finish*
Ref: GQH603BB
£20.00 Exc. VAT **£24.00 Inc. VAT**

Monica 60 Resin Basin
Ref: M60BS Dimensions: 600 x 460mm
£164.00 Exc. VAT **£196.80 Inc. VAT**

Atlanta Basin Mono inc. Click-Clack Waste - Brushed Brass
Ref: BC-6922BB
£100.00 Exc. VAT **£120.00 Inc. VAT**

**Monica unit supplied with Chrome Handles as standard*

485mm Projection

RIMLESS

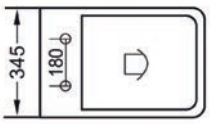

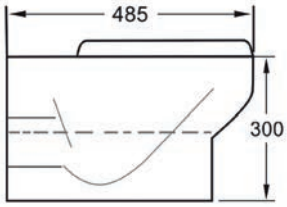

WC Components

NEW Aveiro Rimless Wall-Hung Pan & Soft Close Seat
Ref: AVE-W507C
£281.00 Exc. VAT **£337.20 Inc. VAT**

Ohio Round Push Button Flush Plate - Brushed Brass
Ref: PB-OHBB
£132.00 Exc. VAT **£158.40 Inc. VAT**

NOTE: A Wall-Hung WC Frame and Concealed Cistern would be required for this type of pan installation. Options available from p77-78

Total Suite Price	£2,053.00 Exc. VAT	£2,463.60 Inc. VAT

Also Available:	Ref.	Exc. VAT	Inc. VAT
NEW Aveiro Rimless Tall Close Coupled Open Sided Pan & Soft Close Seat	AVE-W206C	£295.00	£354.00
NEW Aveiro Close Coupled Cistern & Fittings	AVE-C506	£100.00	£120.00
NEW Aveiro Rimless Back-to-Wall Pan & Soft Close Seat	AVE-W513C	£267.00	£320.40
NEW Aveiro Rimless Tall Back-to-Wall Pan & Soft Close Seat	AVE-W208C	£291.00	£349.20

Oregon 120 Base Unit & Double Basin - Platinum Grey

Estoril Back-to-Wall Pan & Soft Close Seat

Total Suite Price:	£4,651.00 Exc. VAT	**£5,581.20 Inc. VAT**

NEW Estoril Comfort Rimless

10 YEAR MANUFACTURERS GUARANTEE

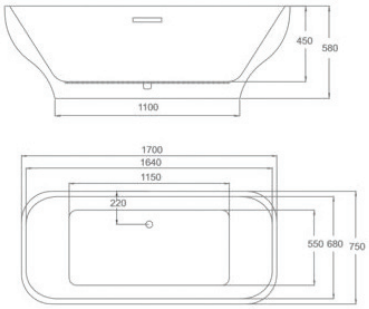

Bath Components	Dimensions	Ref.	Exc. VAT	Inc. VAT
Metropolitan Freestanding Bath with Pre-Fitted Click-Clack Waste	1700 x 750mm	ICN-1038	£1,721.00	**£2,064.00**
Seta Floorstanding Bath Shower Mixer inc. Shower Kit	-	DG6283-354	£873.00	**£1,047.60**

Furniture Components

Oregon 120 Base Unit - Platinum Grey Finish
Ref: ORE120BU Dimensions: 1190 x 478 x 500mm
£1,145.00 Exc. VAT **£1,374.00 Inc. VAT**

Oregon 120 Resin Double Basin
Ref: OR120BS1B Dimensions: 1202 x 488mm
£408.00 Exc. VAT **£489.60 Inc. VAT**

2 x Montana Basin Mono's
Ref: ASC-8182AW
£150.00 Exc. VAT **£180.00 Inc. VAT**

RIMLESS

615mm Projection

SHORT PROJECTION

WC also available with Closed Sides (Priced Below)

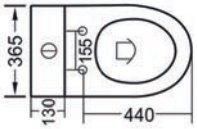

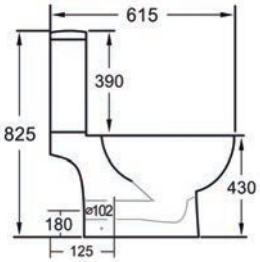

WC Components

NEW Estoril Rimless Tall Close Coupled Open Sided Pan & Soft Close Seat

Ref: EST-W510C
£254.00 Exc. VAT **£304.80 Inc. VAT**

NEW Estoril Close Coupled Cistern & Fittings

Ref: EST-C509
£100.00 Exc. VAT **£120.00 Inc. VAT**

WRAS

Total Suite Price	£4,651.00 Exc. VAT	£5,581.20 Inc. VAT

Also Available:	Ref.	Exc. VAT	Inc. VAT
NEW Estoril Rimless Tall Close Coupled Closed Sided Pan & Soft Close Seat	EST-W519C	£306.00	**£367.20**
NEW Estoril Close Coupled Cistern & Fittings	EST-C509	£100.00	**£120.00**
NEW Estoril Rimless Tall Back-to-Wall Pan & Soft Close Seat	EST-W511C	£254.00	**£304.80**
NEW Estoril Rimless Wall-Hung Pan & Soft Close Seat	EST-W512C	£273.00	**£327.60**

NEW Geo 60 Base Unit & Naxos 60 Basin - Matt Black

NEW Evora Tall Close Coupled Open-Sided WC

Total Suite Price:	£2,746.00 Exc. VAT	**£3,295.20 Inc. VAT**

NEW Evora Rimless

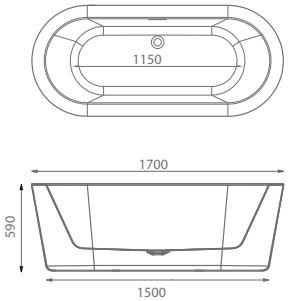

Bath Components	Dimensions	Ref.	Exc. VAT	Inc. VAT
Estoril Freestanding Bath with Pre-Fitted Click-Clack Waste	1700 x 700mm	EST-17/7	£1,475.00	**£1,770.00**
Kansas Floorstanding Bath Shower Mixer inc. Shower Kit	-	ASC-9990B	£362.00	**£434.40**

Furniture Components

NEW Geo 60 1-Drawer Wall-Hung Base Unit - Matt Black
Ref: GEO60BBL Dimensions: 600 x 383 x 390mm
£407.00 Exc. VAT **£488.40 Inc. VAT**

Naxos 60 Ceramic Basin (1TH Only)
Ref: NX60BAS Dimensions: 610 x 390mm
£103.00 Exc. VAT **£123.60 Inc. VAT**

Roma Basin Mono inc. Click-Clack Waste - Matt Black
Ref: QXR005MB
£83.00 Exc. VAT **£99.60 Inc. VAT**

RIMLESS

615mm Projection

SHORT PROJECTION

WC also available with Closed Sides (Priced Below)

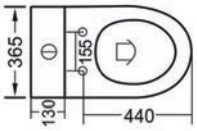

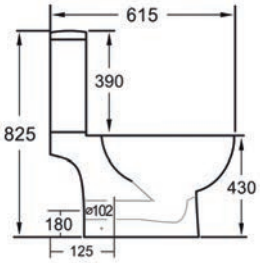

WC Components

NEW Evora Rimless Close Coupled Open Sided Pan & Soft Close Seat
Ref: EVO-W409C
£216.00 Exc. VAT **£259.20 Inc. VAT**

NEW Evora Close Coupled Cistern & Fittings
Ref: EVO-C402
£100.00 Exc. VAT **£120.00 Inc. VAT**

Total Suite Price	£2,746.00 Exc. VAT	£3,295.20 Inc. VAT

Also Available:	Ref.	Exc. VAT	Inc. VAT
NEW Evora Rimless Close Coupled Closed Sided Pan & Soft Close Seat	EVO-W408C	£254.00	**£304.80**
NEW Evora Rimless Tall Close Coupled Open Sided Pan & Soft Close Seat	EVO-W410C	£263.00	**£315.60**
NEW Evora Close Coupled Cistern & Fittings	EVO-C402	£100.00	**£120.00**
NEW Evora Rimless Back-to-Wall Pan & Soft Close Seat	EVO-W402C	£206.00	**£247.20**
NEW Evora Rimless Tall Back-to-Wall Pan & Soft Close Seat	EVO-W412C	£258.00	**£309.60**

Roma 60 with Cornell Ceramic Basin in Marine Blue

Grosvenor Freestanding Bath also available 1550 x 750

Total Suite Price:	£3,359.00 Exc. VAT	**£4,030.80 Inc. VAT**

Crea Round Rimless

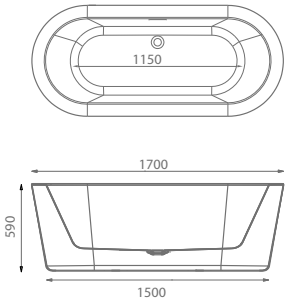

Bath Components	Dimensions	Ref.	Exc. VAT	Inc. VAT
Grosvenor Freestanding Bath with Pre-Fitted Click-Clack Waste	1700 x 750mm	QX-GRO1700	£1,458.00	£1,749.60
Ohio Floorstanding Bath Shower Mixer inc. Shower Kit	-	ASC-8000	£368.00	£441.60

Furniture Components

Roma 60 2-Drawer Wall-Hung Base Unit - Marine Blue/Beech
Ref: ROM60MB Dimensions: 570 x 440 x 518mm
£613.00 Exc. VAT **£735.60 Inc. VAT**

Cornell 60 Ceramic Basin (1TH Only)
Ref: CR60BAS Dimensions: 600 x 460mm
£171.00 Exc. VAT **£205.20 Inc. VAT**

Rimini Basin Mono inc. Click-Clack Waste
Ref: RI05CP
£149.00 Exc. VAT **£178.80 Inc. VAT**

635mm Projection

RIMLESS

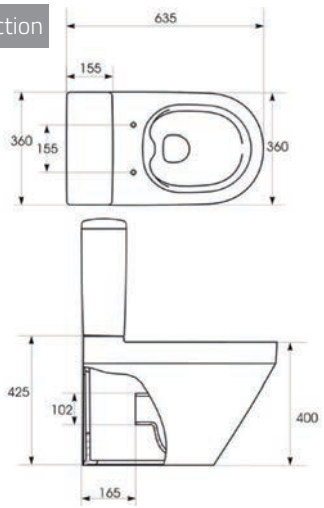

WC Components

Crea Round Rimless Close Coupled Pan & Soft Close Seat

Ref: K673-002
£510.00 Exc. VAT **£612.00 Inc. VAT**

Crea Close Coupled Cistern & Fittings

Ref: K673-003
£90.00 Exc. VAT **£108.00 Inc. VAT**

Total Suite Price	£3,359.00 Exc. VAT	£4,030.80 Inc. VAT

Also Shown With:	Dimensions	Ref.	Exc. VAT	Inc. VAT
Cornell 60 Mirror with LED Light Strips	600 x 700mm	ASC12338	£195.00	£234.00
Opal Horizontal Towel Rail - Chrome	600 x 800mm	OPA-6X8	£304.00	£364.80

Also Available:	Dimensions	Ref.	Exc. VAT	Inc. VAT
Grosvenor 1550 Freestanding Bath	1550 x 750mm	QX-GRO1550	£1,345.00	£1,614.00

Rimini 470 x 460mm Wall-Hung Basin - 1TH Only

Rimini Basin Mono

Total Suite Price:	£3,161.00 Exc. VAT	**£3,793.20 Inc. VAT**

Rimini Rimless Wall-Hung

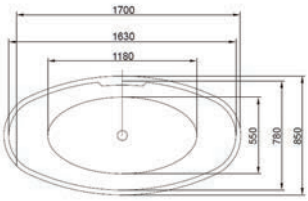

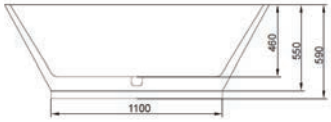

Bath Components	Dimensions	Ref.	Exc. VAT	Inc. VAT
Valentina Freestanding Bath with Pre-Fitted Click-Clack Waste	1700 x 750mm	QX-VAL1700	£1,714.00	£2,056.80
Ohio Floorstanding Single Lever Bath Shower Mixer & Kit	-	ASC-8000	£368.00	£441.60

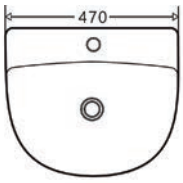

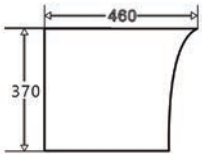

Basin Components

Rimini 470 Ceramic Wall-Hung Basin (1TH Only)
Ref: RIM-7108 Dimensions: 470 x 460mm
£187.00 Exc. VAT **£224.40 Inc. VAT**

Rimini Basin Mono inc. Click-Clack Waste
Ref: RI05CP
£149.00 Exc. VAT **£178.80 Inc. VAT**

485mm Projection

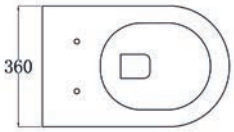

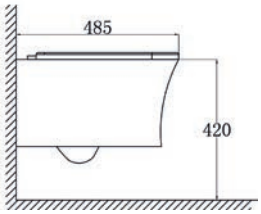

Supplied with concealed fixings

WC Components

Rimini Rimless Wall-Hung Pan & Soft Close Seat
Ref: RIM-343WH
£335.00 Exc. VAT **£402.00 Inc. VAT**

Aqua Pneumatic WC Frame
Ref: S97-062
£325.00 Exc. VAT **£390.00 Inc. VAT**

Accento Square Pneumatic Flush Plate - Chrome
Ref: S97-057
£83.00 Exc. VAT **£99.60 Inc. VAT**

Total Suite Price	£3,161.00 Exc. VAT	£3,793.20 Inc. VAT

Also Shown With:	Dimensions	Ref.	Exc. VAT	Inc. VAT
Radius Round Mirror	600mm Round	ASC6602	£243.00	£291.60

Also Available:	Dimensions	Ref.	Exc. VAT	Inc. VAT
Rimini Rimless Back-to-Wall Pan & Soft Close Seat	565mm Projection	RIM-43BTW	£267.00	£320.40

Rimini 630mm Ceramic Basin - 1TH

Urban Basin Mono inc. Click-Clack Waste

Total Suite Price:	£3,301.00 Exc. VAT	**£3,961.20 Inc. VAT**

Rimini Rimless

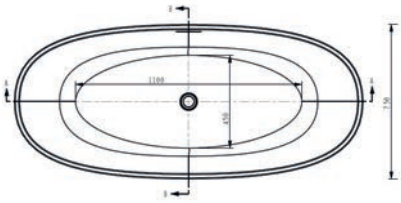

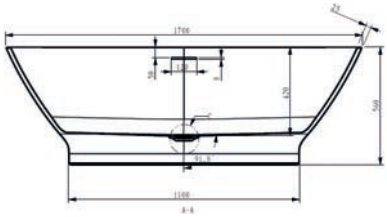

Bath Components	Dimensions	Ref.	Exc. VAT	Inc. VAT
Rimini Freestanding Bath with Pre-Fitted Click-Clack Waste	1700 x 750mm	QX-RIM1700	£1,724.00	**£2,068.80**
Ohio Floorstanding Bath Shower Mixer inc. Kit	-	ASC-8000	£368.00	**£441.60**

Furniture Components

Rimini 60 2-Door Base Unit - Ash Grain Denim (including 2 handles)
Ref: RIM60BD Dimensions: 600 x 465x 800mm
£624.00 Exc. VAT **£750.00 Inc. VAT**

Rimini 630 Ceramic Basin (1TH Only)
Ref: CB131 Dimensions: 630 x 480mm
£145.00 Exc. VAT **£174.00 Inc. VAT**

Urban Basin Mono inc. Click-Clack Waste
Ref: ALP-9072W
£83.00 Exc. VAT **£99.60 Inc. VAT**

RIMLESS

638mm Projection

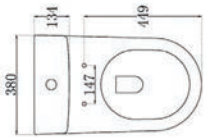

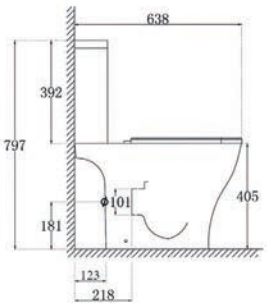

WC Components

Rimini Rimless Close Coupled Pan & Soft Close Seat
Ref: RIM-O1343B
£275.00 Exc. VAT **£330.00 Inc. VAT**

Verona Close Coupled Cistern & Fittings for Open Sided Pan
Ref: VEN/R-OP04
£82.00 Exc. VAT **£98.40 Inc. VAT**

Total Suite Price	£3,301.00 Exc. VAT	£3,961.20 Inc. VAT

Also Shown With:	Dimensions	Ref.	Exc. VAT	Inc. VAT
Radius Round Mirror with integrated LED Light	600mm Round	ASC6602	£243.00	**£291.60**
Campania Towel Rail - Anthracite Finish	1000 x 400mm	CAM-10X4	£129.00	**£154.80**

Also Available:	Dimensions	Ref.	Exc. VAT	Inc. VAT
Rimini Rimless Back-to-Wall Pan & Soft Close Seat	565mm Projection	RIM-43BTW	£267.00	**£320.40**
Rimini Elevated Height Pan & Soft Close Seat *to be used with Verona Open Cistern (priced above)*		TALL1343BH	£359.00	**£430.80**

Monza 550mm Ceramic Basin - 1TH

Urban Basin Mono inc. Click-Clack Waste

Total Suite Price:	£2,769.00 Exc. VAT	**£3,322.80 Inc. VAT**
4-Piece Price *(Inc. Seat):*	£753.00 Exc. VAT	**£903.60 Inc. VAT**

Monza Rimless

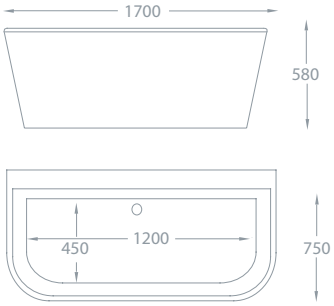

Bath Components	Dimensions	Ref.	Exc. VAT	Inc. VAT
Monza Freestanding Bath with Pre-Fitted Click-Clack Waste	1700 x 750mm	ICN-1029	£1,792.00	**£2,150.40**
Urban Bath Filler	-	ALP-9074	£141.00	**£169.20**

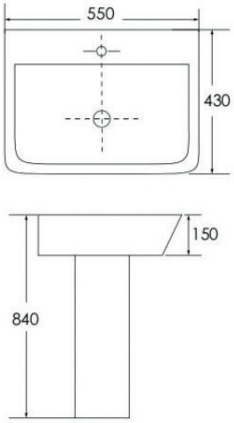

Basin Components

Monza 550 Ceramic Basin (1TH Only)
Ref: MON-201D Dimensions: 550 x 430mm
£144.00 Exc. VAT **£172.80 Inc. VAT**

Monza Pedestal
Ref: MON-201D-PED
£70.00 Exc. VAT **£84.00 Inc. VAT**

Urban Basin Mono inc. Click-Clack Waste
Ref: ALP-9072W
£83.00 Exc. VAT **£99.60 Inc. VAT**

RIMLESS

640mm Projection

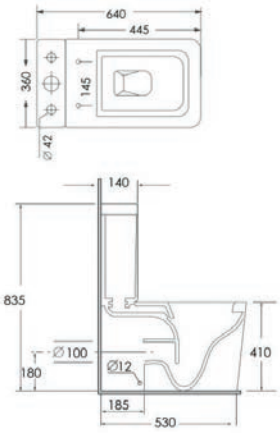

WC Components

Monza Rimless Close Coupled Pan & Soft Close Seat
Ref: MON-2170P
£368.00 Exc. VAT **£441.60 Inc. VAT**

Monza Close Coupled Cistern & Fittings
Ref: MON-2170C
£171.00 Exc. VAT **£205.20 Inc. VAT**

Total Suite Price	£2,769.00 Exc. VAT	£3,322.80 Inc. VAT

Also Shown With:	Dimensions	Ref.	Exc. VAT	Inc. VAT
Atlanta Battery Operated Mirror with integrated LED Lights	500 x 700mm	ASC12BA	£106.00	£127.20
Utah Towel Ring	-	KPY-004	£44.00	£52.80

Urban 1000 WC Combination - Gloss White

Monza Rimless Wall-Hung Pan & Soft Close Seat

Total Suite Price:	£3,067.00 Exc. VAT	**£3,680.40 Inc. VAT**

Monza Rimless Back-to-Wall

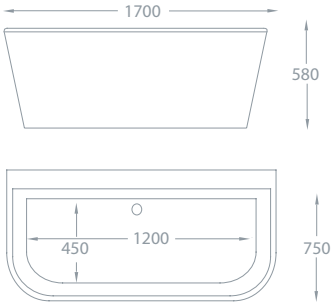

Bath Components	Dimensions	Ref.	Exc. VAT	Inc. VAT
Monza Freestanding Bath with Pre-Fitted Click-Clack Waste	1700 x 750mm	ICN-1029	£1,792.00	**£2,150.40**
Urban Bath Filler	-	ALP-9074	£141.00	£169.20

Furniture Components

Urban 50 1-Door Base Unit - Gloss White
Ref: UR50W — Dimensions: 490 x 345 x 800mm
£193.00 Exc. VAT — **£231.60 Inc. VAT**

Urban 50 WC Base Unit with no top (for 1-piece basin)
Ref: UR50WCNTW — Dimensions: 500 x 345 x 800mm
£182.00 Exc. VAT — **£218.40 Inc. VAT**

Urban 100 1-Piece Resin Basin (Reversible)
Ref: UR100BS — Dimensions: 1000 x 350mm
£303.00 Exc. VAT — **£363.60 Inc. VAT**

Urban Basin Mono inc. Click-Clack Waste
Ref: ALP-9072W
£83.00 Exc. VAT — £99.60 Inc. VAT

RIMLESS

560mm Projection

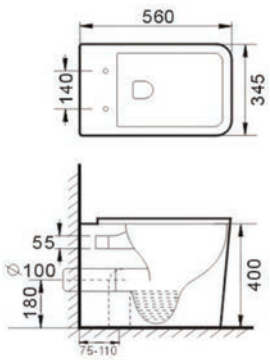

WC Components

Monza Rimless Back-to-Wall Pan & Soft Close Seat
Ref: MON-126B3
£319.00 Exc. VAT — **£382.80 Inc. VAT**

Genesis Concealed Cistern - Dual Flush
Ref: GEN-CONC
£54.00 Exc. VAT — £64.80 Inc. VAT

Total Suite Price	£3,067.00 Exc. VAT	£3,680.40 Inc. VAT

Also Shown With:	Dimensions	Ref.	Exc. VAT	Inc. VAT
Atlanta Battery Operated Mirror with integrated LED Lights	500 x 700mm	ASC12BA	£106.00	£127.20

Also Available:	Dimensions	Ref.	Exc. VAT	Inc. VAT
Monza Rimless Wall-Hung Pan & Soft Close Seat	-	MON-0503C	£374.00	**£448.80**

Verona 525 x 450mm Wall-Hung Basin (1TH Only)

Caribbean 600 x 1000mm Horizontal Towel Rail

Total Suite Price:	£2,997.00 Exc. VAT	**£3,596.40 Inc. VAT**

Verona Rimless Wall-Hung

10 YEAR MANUFACTURERS GUARANTEE

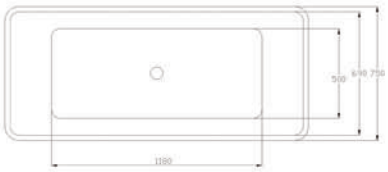

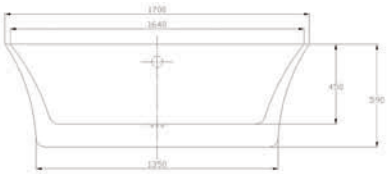

Bath Components	Dimensions	Ref.	Exc. VAT	Inc. VAT
Verona Freestanding Bath with Pre-Fitted Click-Clack Waste	1700 x 750mm	ICN-1026	£1,642.00	£1,970.40
Grosvenor Floorstanding Single Lever Bath Shower Mixer & Kit	-	ASC-8170B	£444.00	£532.80

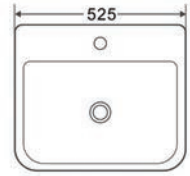

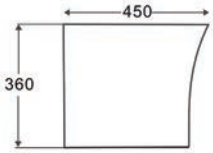

Basin Components

Verona 525 Ceramic Wall-Hung Basin (1TH Only)
Ref: VER-7105 Dimensions: 525 x 450mm
£221.00 Exc. VAT **£265.20 Inc. VAT**

Urban Basin Mono inc. Click-Clack Waste
Ref:ALP-9072W
£83.00 Exc. VAT **£99.60 Inc. VAT**

440mm Projection

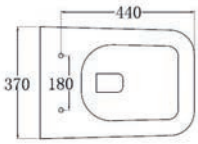

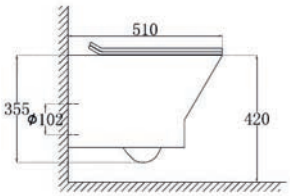

Supplied with concealed fixings

WC Components

Verona Rimless Wall-Hung Pan & Soft Close Seat
Ref: VER-WH09
£284.00 Exc. VAT **£340.80 Inc. VAT**

Aqua Mechanical WC Frame
Ref: S97-046
£244.00 Exc. VAT **£292.80 Inc. VAT**

Movi Manual Flush Plate - Black Glass
Ref: S97-013
£79.00 Exc. VAT **£94.80 Inc. VAT**

Total Suite Price	£2,997.00 Exc. VAT	£3,596.40 Inc. VAT

Also Shown With:	Dimensions	Ref.	Exc. VAT	Inc. VAT
Arizona 600 Mirror with Integrated Light Strip	600 x 700mm	ASC6700A	£247.00	£296.40
Caribbean Horizontal Rail - Chrome	600 x 1000mm	CAR-60X10	£217.00	£260.40

Also Available:	Dimensions	Ref.	Exc. VAT	Inc. VAT
Verona Rimless Back-to-Wall Pan & Soft Close Seat	560mm Projection	VER-BW53	£267.00	£320.40

Verona 550mm Basin & Full Pedestal
Basin Available in 3 Size Options

NEW Aveiro Basin Mono
inc. Click-Clack Waste

Verona 450mm Basin & Semi Pedestal

Total Suite Price: £1,528.00 Exc. VAT **£1,833.60 Inc. VAT**

Verona Rimless

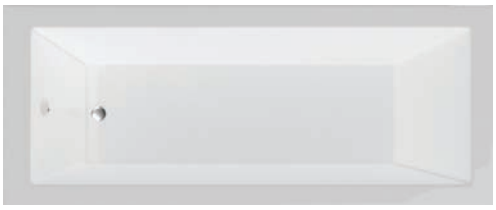

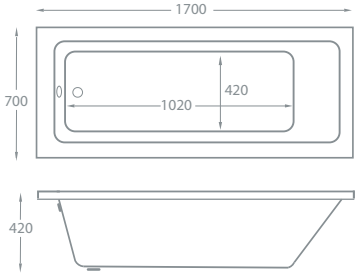

Bath Also Available:

Bath Sizes Available:
- 1500 x 700mm - Standard & Superspec
- 1600 x 700mm - Standard & Superspec
- 1700 x 700mm - Standard & Superspec

Bath Components	Dimensions	Ref.	Exc. VAT	Inc. VAT
Montana Single Ended Standard Spec Bath	1700 x 700mm	MON17/7	£349.00	£418.80
Destiny MDF Bath Front Panel - Gloss White	1700mm	163003	£145.00	£174.00
Destiny MDF Bath End Panel - Gloss White	700mm	163011	£72.00	£86.40
Genesis 8mm Single Bath Screen	1500mm (H) x 800mm (W)	QXG8SS800	£208.00	£249.60
QX Bath Pop-Up Waste	-	QXW1908	£40.00	£48.00
Montana Bath Shower Mixer inc. Shower Kit *(Not Pictured)*	-	ASC-8181A	£152.00	£182.40

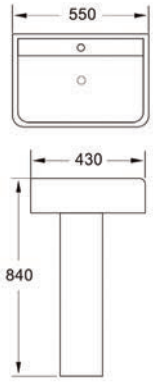

Furniture Components

Verona 550 Basin - 1TH
Ref: VER-B201-B Dimensions: 550 x 430mm
£115.00 Exc. VAT **£138.00 Inc. VAT**

Verona Full Pedestal
Ref: VER-7005 Dimensions: 840mm Total Height
£52.00 Exc. VAT **£62.40 Inc. VAT**

NEW Aveiro Basin Mono inc. Click-Clack Waste
Ref: ASC-9742W
£67.00 Exc. VAT **£80.40 Inc. VAT**

Exposed Inlet

645mm Projection

WC also available with Open-Sides (Priced Below)

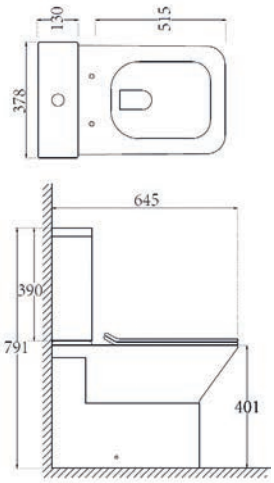

WC Components

Verona Rimless Close Coupled Pan with Closed Sides *(with Exposed Inlet)* & Soft Close Seat
Ref: VER-E002
£256.00 Exc. VAT **£307.20 Inc. VAT**

Verona Close Coupled Cistern & Fittings for Closed Sided Pan
Ref: VEN/R-CL05
£72.00 Exc. VAT **£86.40 Inc. VAT**

Total Suite Price	£1,528.00 Exc. VAT	£1,833.60 Inc. VAT

Also Shown With:	Dimensions	Ref.	Exc. VAT	Inc. VAT
Radius Round Mirror with LED Light Surround	600mm Round	ASC6602	£243.00	£291.60
Kansas Towel Rail - Chrome	1800 x 226mm	KAN-18X22	£287.00	£344.40
Also Available:				
Verona 450 Basin - 1TH	450 x 375mm	VER-B202-B	£93.00	£111.60
Verona 500 Basin - 1TH	500 x 420mm	VER-B203-B	£105.00	£126.00
Verona 550 Basin - 1TH	550 x 430mm	VER-B201-B	£115.00	£138.00
Verona Full Pedestal	-	VER-7005	£52.00	£62.40
Verona Semi-Pedestal	-	VER-7404	£47.00	£56.40
Verona Rimless Close Coupled Pan, with Open Sides & Soft Close Seat		VER-OP11	£247.00	£296.40
Verona Close Coupled Cistern & Fittings for Open Sided Pan		VEN/R-OP04	£82.00	£98.40

Pictured with the Venice Rimless Pan
with Open Sides & Soft Close Seat

Opal 120 1-Piece Furniture Combination in Platinum Grey

Venice Rimless WC with Closed Sides *(with Exposed Inlet)*

Total Suite Price: £2,686.00 Exc. VAT **£3,223.20 Inc. VAT**

Venice Rimless

Shower Enclosure Components	Dimensions	Ref.	Exc. VAT	Inc. VAT
Ascent 10 Quadrant Enclosure	900 x 900 x 2000mm(H)	ASC611SS	£950.00	**£1,140.00**
Ascent Premier 30mm Cast Stone Tray	900mm Quad	ASC900Q	£239.00	**£286.80**
Ascent 90mm Shower Trap Waste	-	TAST1CP-K	£13.00	**£15.60**
Ohio Round Shower Head	200mm Diameter	FLS-8002C	£56.00	**£67.20**
Ohio Shower Head Fixing Arm	400 x 42mm	FLS-801C	£47.00	**£56.40**
Ohio Twin Thermostatic Shower Valve with 1 Outlet *(Controls 1 Function)*	-	QX-OH-TW1W	£194.00	**£232.80**

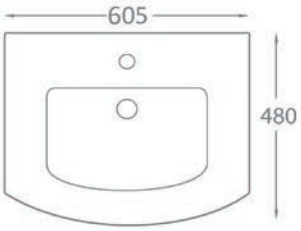

Furniture Components

Opal 60 2-Door Base Unit - Platinum Grey
Ref: OP60FLPL Dimensions: 599 x 472 x 800mm
£605.00 Exc. VAT **£726.00 Inc. VAT**

Opal 60 Curved Resin Basin
Ref: OP60BAS Dimensions: 605 x 480mm
£163.00 Exc. VAT **£195.60 Inc. VAT**

Roma Basin Mono inc. Click-Clack Waste - Matt Grey
Ref: QXRO05MG
£94.00 Exc. VAT **£112.80 Inc. VAT**

625mm Projection

SHORT PROJECTION

RIMLESS

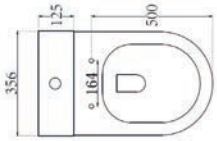

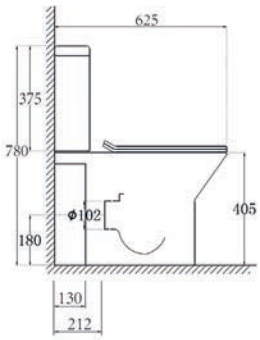

WC Components

Venice Rimless Close Coupled Pan, with Open Sides & Soft Close Seat
Ref: VEN-OP02
£243.00 Exc. VAT **£291.60 Inc. VAT**

Venice Close Coupled Cistern & Fittings for Open Sided Pan
Ref: VEN/R-OP04
£82.00 Exc. VAT **£98.40 Inc. VAT**

Total Suite Price			£2,686.00 Exc. VAT	£3,223.20 Inc. VAT
Also Shown With:	**Dimensions**	**Ref.**	**Exc. VAT**	**Inc. VAT**
Opal Round Mirror with Black Frame	600mm Round	ASC0606-25	£250.00	**£300.00**
Also Available:				
Venice Rimless Close Coupled Pan, with Closed Sides *(with Exposed Inlet)* & Soft Close Seat		VEN-MO02	£258.00	**£309.60**
Venice Close Coupled Cistern & Fittings for Closed Sided Pan		VEN/R-CL05	£72.00	**£86.40**
Opal 1200mm 1-Piece Furniture Combination:				
Opal 60 2-Door Base Unit - Platinum Grey		OP60FLPL	£605.00	**£726.00**
Opal 60 WC Base Unit (no top) - Platinum Grey		OP60WCNTPL	£257.00	**£308.40**
Opal 120 1-Piece Basin (LH or RH) - Pictured Left Hand		OP120BSN	£416.00	**£499.20**
Opal 1200mm 1-Piece Furniture Combination Total			£1,278.00	**£1,533.60**

Oregon 90 Combination in Matt Moonlight Blue

Venice Rimless Wall-Hung Pan & Soft Close Seat

Total Suite Price:	£3,490.00 Exc. VAT	**£4,188.00 Inc. VAT**

Venice Rimless Back-to-Wall

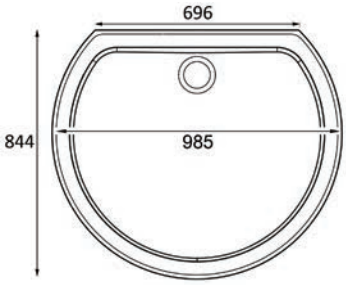

Shower Enclosure Components	Dimensions	Ref.	Exc. VAT	Inc. VAT
Ascent Premier Roller 'D' Shaped Enclosure	985 x 844 x 2000mm	PR317QUPSC	£1,147.00	**£1,376.40**
Ascent 'D' Shaped 30mm Cast Stone Shower Tray	985 x 844mm	ASC/D985	£244.00	**£292.80**
Ascent 90mm Shower Trap and Removable Waste	-	TAST1CP-K	£13.00	**£15.60**
Ohio Round Shower Head	200mm Diameter	FLS-8002C	£56.00	**£67.20**
Ohio Shower Head Fixing Arm	400 x 42mm	FLS-801C	£47.00	**£56.40**
Ohio Twin Thermostatic Shower Valve with 1 Outlet *(Controls 1 Function)*	-	QX-OH-TW1W	£194.00	**£232.80**

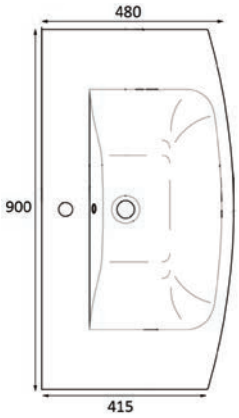

Furniture Components

Oregon 90 2-Drawer Wall-Hung Base Unit - Matt Moonlight Blue
Ref: ORE90BU-MMB Dimensions: 890 x 475 x 500mm
£860.00 Exc. VAT **£1,032.00 Inc. VAT**

Oregon 90 Resin Basin
Ref: OR90BS Dimensions: 900 x 480mm
£229.00 Exc. VAT **£274.80 Inc. VAT**

Charlotte Basin Mono inc. Click-Clack Waste
Ref: ASC-8922W
£74.00 Exc. VAT **£88.80 Inc. VAT**

RIMLESS

565mm Projection

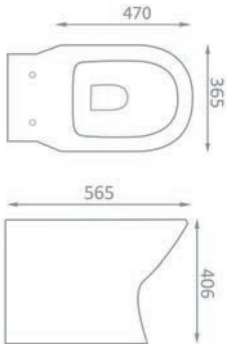

WC Components

Oregon 60 WC Base Unit - Matt Moonlight Blue
Ref: ORE60WC-MMB Dimensions: 600 x 250 x 800mm
£305.00 Exc. VAT **£366.00 Inc. VAT**

Venice Rimless Back-to-Wall Pan & Slimline Soft Close Seat
Ref: VEN-M003
£267.00 Exc. VAT **£320.40 Inc. VAT**

Genesis Concealed Cistern - Dual Flush
Ref: GEN-CONC
£54.00 Exc. VAT **£64.80 Inc. VAT**

Total Suite Price		£3,490.00 Exc. VAT		£4,188.00 Inc. VAT
Also Shown With:	**Dimensions**	**Ref.**	**Exc. VAT**	**Inc. VAT**
Kansas Mirror with Integrated Lights	600 x 800mm	ASC6806-80	£235.00	**£282.00**
Ebony Towel Rail with Towel Bar - Chrome	1200 x 500mm	EBO-12X5	£193.00	**£231.60**
Also Available:				
Venice Rimless Wall-Hung Pan & Soft Close Seat	510mm Projection	VEN-M009	£280.00	**£336.00**
Oregon 60 2-Drawer Base Unit - Matt Moonlight Blue	590 x 470 x 500mm	ORE60BU-MMB	£721.00	**£865.20**
Oregon 60 Resin Basin	600 x 480mm	OR60BS	£169.00	**£202.80**

Roma Column - Graphite Finish with Beech Inset

Cornell 60 Ceramic Basin shown on Roma in Marine Blue

Total Suite Price:	£3,969.00 Exc. VAT	**£4,762.80 Inc. VAT**

Ritz Rimless

10 YEAR MANUFACTURERS GUARANTEE

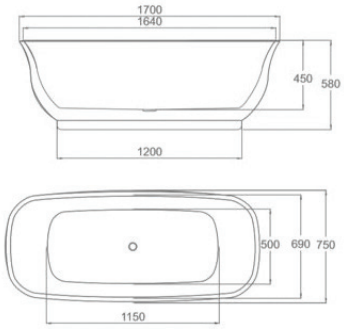

Bath Components	Dimensions	Ref.	Exc. VAT	Inc. VAT
Ritz Freestanding Bath with Pre-Fitted Click-Clack Waste	1700 x 750mm	ICN-912	£1,710.00	£2,052.00
Seta Floorstanding Bath Shower Mixer inc. Shower Kit	-	DG6283-354	£873.00	**£1,047.60**

Furniture Components

Roma 60 2-Drawer Wall-Hung Base Unit - Graphite/Beech
Ref: ROM60BG Dimensions: 570 x 440 x 518mm
£613.00 Exc. VAT **£735.60 Inc. VAT**

Cornell 60 Ceramic Basin (1TH Only)
Ref: CR60BAS Dimensions: 600 x 460mm
£171.00 Exc. VAT **£205.20 Inc. VAT**

Seta Basin Mono inc. Click-Clack Waste
Ref: DG6222-337
£179.00 Exc. VAT **£214.80 Inc. VAT**

RIMLESS

615mm Projection

SHORT PROJECTION

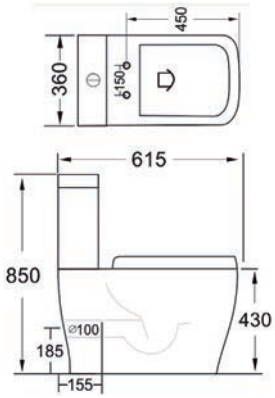

WC Components

Ritz Rimless Close Coupled Pan & Soft Close Seat
Ref: RIT-JW001
£344.00 Exc. VAT **£412.80 Inc. VAT**

Ritz Close Coupled Cistern & Fittings
Ref: RIT-JW506
£79.00 Exc. VAT **£94.80 Inc. VAT**

Total Suite Price	£3,969.00 Exc. VAT	£4,762.80 Inc. VAT

Also Shown With:	Dimensions	Ref.	Exc. VAT	Inc. VAT
Oslo Radiator - Black Nickel Finish	1800 x 360mm	OS-18X3BN	£452.00	**£542.40**
Cornell 60 Mirror with LED Lights	600 x 700mm	ASC12338	£195.00	**£234.00**

Also Available:	Dimensions	Ref.	Exc. VAT	Inc. VAT
Roma 60 Base Unit - Supermatt Marine Blue Finish	570 x 440 x 518mm	ROM60MB	£613.00	**£735.60**

Oregon Comfort Height Close Coupled WC

Modena 60 Base Unit - Platinum Grey
Also available in Matt Black finish

Total Suite Price: £2,791.00 Exc. VAT **£3,349.20 Inc. VAT**

Oregon Rimless

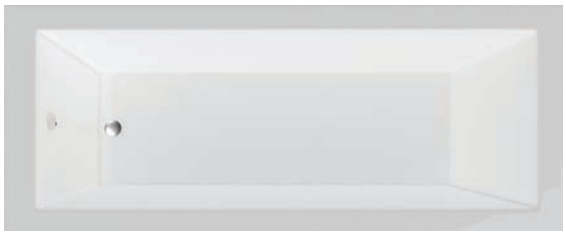

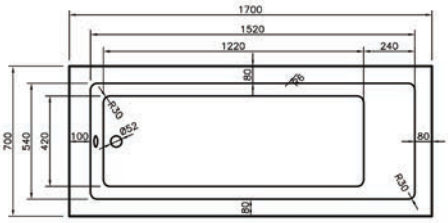

Size Options:
- 1500 x 700mm
- 1600 x 700mm
- 1700 x 700mm

Bath Components	Dimensions	Ref.	Exc. VAT	Inc. VAT
Montana Single Ended Standard Spec Bath	1700 x 700mm	MON17/7	£349.00	£418.80
Q-Line MDF Bath Front Panel - Platinum Grey	1700mm	GQ1700BPPL	£229.00	£274.80
Q-Line MDF Bath End Panel - Platinum Grey	700mm	GQ700BPPL	£95.00	£114.00
Genesis 8mm Curved Bath Screen	1500mm (H) x 800mm (W)	QXG8SS800	£208.00	£249.60
QX Click-Clack Bath Waste - Black	-	QXWA900EK	£40.00	**£48.00**
Roma 2TH Bath Filler - Matt Grey	-	QXRO03MG	£143.00	**£171.60**
Roma Round Thermostatic Bar Valve & Kit - Matt Grey	-	QXSH104MG	£273.00	**£327.60**

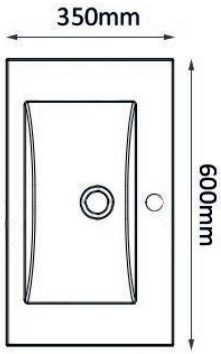

Furniture Components

Modena 60 1-Door, 2-Door Base Unit - Platinum Grey
Ref: MOD60WHPL Dimensions: 598 x 344 x 480mm
£367.00 Exc. VAT **£440.40 Inc. VAT**

Q-Line 60 Square Basin
Ref: QXLINE600 Dimensions: 600 x 350mm
£175.00 Exc. VAT £210.00 Inc. VAT

Modena 2-Door Tall Column
Ref: MOD30CPL Dimensions: 300 x 345 x 1550mm
£450.00 Exc. VAT **£540.00 Inc. VAT**

Roma Basin Mono inc. Click-Clack Waste - Matt Grey
Ref: QXRO05MG
£94.00 Exc. VAT **£112.80 Inc. VAT**

590mm Projection

SHORT PROJECTION

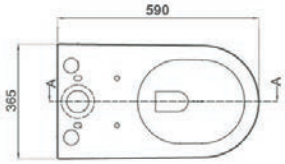

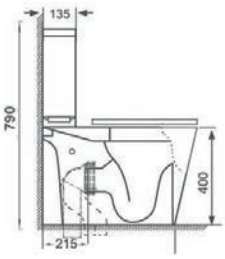

WC Components

Oregon Rimless Open-Sided Close Coupled Pan & Soft Close Seat
Ref: ORE-1363C
£286.00 Exc. VAT **£343.20 Inc. VAT**

Venice Close Coupled Cistern & Fittings for Open Sided Pan
Ref: VEN/R-OP04
£82.00 Exc. VAT **£98.40 Inc. VAT**

Total Suite Price	£2,791.00 Exc. VAT	£3,349.20 Inc. VAT

Also Shown With:	Dimensions	Ref.	Exc. VAT	Inc. VAT
Nevada 60 Mirror with Integrated Light	400 x 600mm	ASC4060	£158.00	**£189.60**
Kansas Rail with Mirror - Anthracite Finish	1800 x 381mm	KCT-18X31	£306.00	**£367.20**

Also Available:				
Oregon Comfort Height Close Coupled Pan & Soft Close Seat	-	ORE-1273P	£318.00	**£381.60**
Venice Close Coupled Cistern & Fittings for Open Sided Pan	-	VEN/R-OP04	£82.00	**£98.40**

Oregon Rimless Wall-Hung Pan & Slim Soft Close Seat

Serene 120 1-Piece Basin

Total Suite Price:	£3,656.00 Exc. VAT	**£4,387.20 Inc. VAT**

Oregon Rimless Back-to-Wall

Bath Components	Dimensions	Ref.	Exc. VAT	Inc. VAT
Kansas Standard Spec Bath	1700 x 750mm	KN17/75	£360.00	£432.00
Kansas Panel	1700 x 750mm	KNPAN	£225.00	£270.00
Kansas Bath Filler	-	ASC-9954B	£177.00	£212.40
QX Click-Clack Bath Waste - Black	-	QXWA900EK	£40.00	**£48.00**

Shower Enclosure Components	Dimensions	Ref.	Exc. VAT	Inc. VAT
Classic 900 Walk-In Panel - Black Frame	900mm	QX6CN45BC	£292.00	**£350.40**
Classic 800 Walk-In Panel - Black Frame	800mm	QX6CN44BC	£280.00	**£336.00**
Ascent Premier 30mm Linear Tray	1800 x 800mm	LIN18/8	£568.00	**£681.60**
Ascent 90mm Shower Waste	-	TAST1CP-K	£13.00	£15.60
Utah Round Twin Thermostatic Shower Valve Matt Black - *Controls 2 Functions*	-	QXCVQ03K	£252.00	**£302.40**
Utah Round Shower Head - Matt Black	250mm Round	QXSHE2525BK	£74.00	**£88.80**
Utah Shower Head Fixing Arm - Matt Black	350mm	QXSA01K	£34.00	**£40.80**

Furniture Components

Eden 60 2-Door Base Unit - Platinum Grey
Ref: ED60PL — Dimensions: 590 x 345 x 800mm
£218.00 Exc. VAT — £261.60 Inc. VAT

Urban 60 WC Base Unit (No Top) - Platinum Grey
Ref: UR60WCNTPL — Dimensions: 600 x 345 x 800mm
£225.00 Exc. VAT — £270.00 Inc. VAT

Serene 1-Piece Basin - LH or RH *(Pictured LH)*
Ref: S120BAS — Dimensions: 1200 x 350mm (450mm max)
£428.00 Exc. VAT — **£513.60 Inc. VAT**

Kansas Basin Mono inc. Click-Clack Waste - Matt Black
Ref: ASC-9952BW
£107.00 Exc. VAT — £128.40 Inc. VAT

540mm Projection

RIMLESS

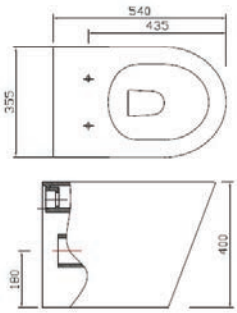

WC Components

Oregon Rimless Back-to-Wall Pan & Soft Close Seat
Ref: OR-1273BWP
£309.00 Exc. VAT — **£370.80 Inc. VAT**

Genesis Concealed Cistern - Dual Flush
Ref: GEN-CONC
£54.00 Exc. VAT — £64.80 Inc. VAT

Total Suite Price	£3,656.00 Exc. VAT	£4,387.20 Inc. VAT

Also Shown With:	Dimensions	Ref.	Exc. VAT	Inc. VAT
Utah Mirror with LED Light Strip & Matt Black Frame	500 x 600mm	ASC5060	£254.00	**£304.80**
Utah Towel Rail - Matt Black	800 x 500mm	UTA-8X5MB	£72.00	**£86.40**

Also Available				
Oregon Rimless Wall-Hung Pan & Slim Soft Close Seat	540mm Projection	OR-M0513	£335.00	**£402.00**
Venice Slim Soft Close Seat (Not Pictured)	-	VEN-M004	£79.00	**£94.80**

Charlotte Back-to-Wall Pan & Slim Soft Close Seat
Pictured with Monica 120 1-Piece Combination - See p334

Cornell 60 Combination - Textured White Finish

Total Suite Price: £3,228.00 Exc. VAT **£3,873.60 Inc. VAT**

Charlotte

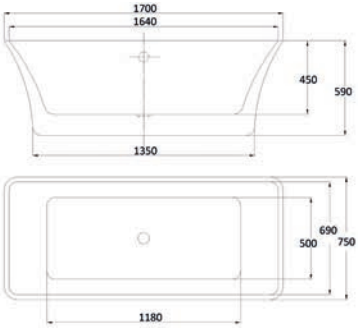

Bath Components	Dimensions	Ref.	Exc. VAT	Inc. VAT
Verona Freestanding Bath with Pre-Fitted Click-Clack Waste	1700 x 750mm	ICN-1026	£1,642.00	£1,970.40
Ohio Floorstanding Single Lever Bath Shower Mixer	-	ASC-8000	£368.00	£441.60

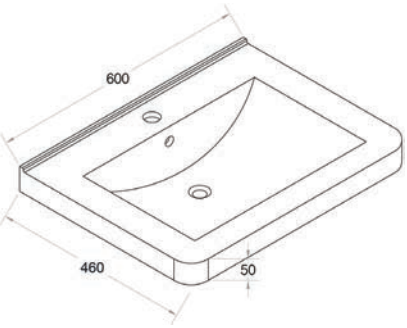

Furniture Components

Cornell 60 2-Drawer Base Unit - Textured White
Ref: CR60BUTW Dimensions: 596 x 440 x 800mm
£619.00 Exc. VAT **£742.80 Inc. VAT**

Cornell 60 Ceramic Basin - 1TH Only
Ref: CR60BAS Dimensions: 600 x 460mm
£171.00 Exc. VAT **£205.20 Inc. VAT**

Charlotte Basin Mono inc. Click-Clack Waste
Ref: ASC-8922W
£74.00 Exc. VAT **£88.80 Inc. VAT**

Venice Furniture available as an alternative - See p283

660mm Projection

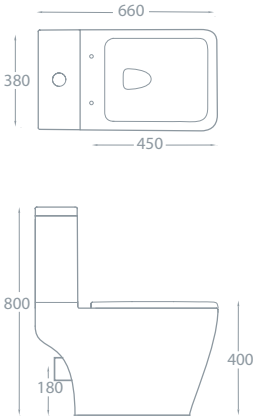

WC Components

Charlotte Close Coupled Pan Only
Ref: CHASOP-001
£178.00 Exc. VAT **£213.60 Inc. VAT**

Arizona/Charlotte Close Coupled Cistern & Fittings
Ref: ARCH-005
£97.00 Exc. VAT **£116.40 Inc. VAT**

Arizona/Charlotte Slim Soft Close WC Seat Only
Ref: ARCH-004
£79.00 Exc. VAT **£94.80 Inc. VAT**

Total Suite Price		£3,228.00 Exc. VAT	£3,873.60 Inc. VAT

Also Shown With:	Dimensions	Ref.	Exc. VAT	Inc. VAT
Aston Mirror with Integrated Lights	800 x 600mm	ASC5800E	£247.00	£296.40
Ebony Towel Rail with Towel Bar - Chrome	1200 x 500mm	EBO-12X5	£193.00	£231.60
Also Available				
Charlotte Back-to-Wall Pan Only	-	CHASOP0003	£188.00	£225.60
Arizona/Charlotte Standard Wrap-over Soft Close Seat only	-	ARCH-122	£76.00	£91.20

Cornell 1680 x 760mm Freestanding Bath

Cornell Comfort Back-to-Wall Pan
& Soft Close Seat

Total Suite Price:	£1,958.00 Exc. VAT	**£2,349.60 Inc. VAT**

Cornell Rimless

25 YEAR MANUFACTURERS GUARANTEE

Furniture Components

Tuscany 90 3-Drawer Base Unit - Dusty Pink Finish
Ref: TUS90BDP Dimensions: 890 x 450 x 800mm
£1,095.00 Exc. VAT **£1,314.00 Inc. VAT**

Porto 90 Ceramic Basin
Ref: CB5490 Dimensions: 900 x 460mm
£321.00 Exc. VAT **£385.20 Inc. VAT**

3 x Rimini Bar Handle - Pewter Finish
Ref: RIMBARPEWT
£57.00 Exc. VAT **£68.40 Inc. VAT**

Roma Basin Mono Inc. Click-Clack Waste - Matt Grey
Ref: QXRO05MG
£94.00 Exc. VAT **£112.80 Inc. VAT**

Full Range of Tuscany Furniture available on p262-263, including Pearl Grey Finish, Handle Choices and Worktop options

Pearl Grey Finish

RIMLESS

635mm Projection

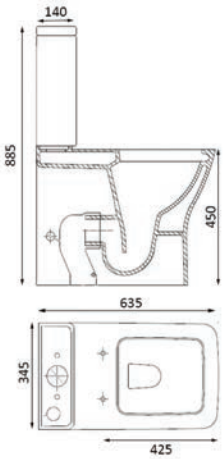

WC Components

Cornell Comfort Rimless Close Coupled
(Fully Back-to-Wall) Pan & Slim Soft Close Seat
Ref: CO-W425R
£266.00 Exc. VAT **£319.20 Inc. VAT**

Cornell Close Coupled Cistern & Fittings
Ref: CO-T125
£125.00 Exc. VAT **£150.00 Inc. VAT**

Total Suite Price	£1,958.00 Exc. VAT	£2,349.60 Inc. VAT

Also Shown With:	**Dimensions**	**Ref.**	**Exc. VAT**	**Inc. VAT**
Radius Round Mirror with Integrated Lights	600mm Round	ASC6602	£243.00	**£291.60**
Florence with Shelf - Chrome/White Radiator	963 x 673mm	FSH-96X63	£466.00	**£559.20**
Grosvenor Roll Holder - Chrome	-	KRO-003	£48.00	**£57.60**
Also Available:				
Cornell Freestanding Bath with pre-fitted Click-Clack Waste	1680 x 790mm	QX-COR1650	£1,717.00	**£2,060.40**
Cornell Comfort Back-to-Wall Pan & Soft Close Seat	500mm Projection	CO-W225H	£365.00	**£438.00**

Arizona

Bath Components	Dimensions	Ref.	Exc. VAT	Inc. VAT
Arizona Double Ended Standard Spec Bath	1800 x 800mm	ARIZ18/8	£402.00	£482.40
QX Plain MDF Bath Front Panel - Gloss White	1800mm	163108	£140.00	£168.00
QX Plain MDF Bath End Panel - Gloss White	800mm	163103	£72.00	£86.40
Genesis Square Bath Screen	1500mm (H) x 800mm (W)	QXGSQS800	£183.00	£219.60
Arizona Bath Filler	-	ASC-9054	£148.00	£177.60
QX Bath Pop-Up Waste	-	QXW1908	£40.00	£48.00
Ohio Round Shower Head	200mm Diameter	FLS-8002C	£56.00	£67.20
Ohio Shower Head Fixing Arm	400 x 24mm	FLS-801C	£47.00	£56.40
Ohio Twin Thermostatic Shower Valve with 1 Outlet *(Controls 1 Function)*	-	QX-OH-TW1W	£194.00	£232.80

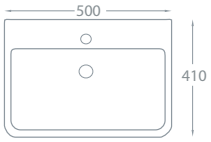

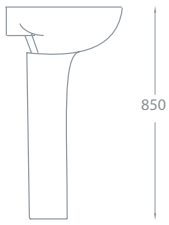

Basin Components	Dimensions	Ref.	Exc. VAT	Inc. VAT
Arizona 500 Ceramic Basin (1TH Only)	500 x 410mm	ARIOLI-006	£73.00	£87.60
Arizona Pedestal	-	ARIOLI-008	£38.00	£45.60
Arizona Basin Mono inc. Click-Clack Waste	-	ASC-9052W	£92.00	£110.40

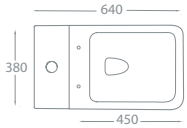

WC Components	Dimensions	Ref.	Exc. VAT	Inc. VAT
Arizona Close Coupled Pan & Soft Close Seat	-	ARIOLI-001	£251.00	£301.20
Arizona/Charlotte Close Coupled Cistern & Fittings	-	ARCH-005	£97.00	£116.40
Total Suite Price			**£1,833.00 Exc. VAT**	**£2,199.60 Inc. VAT**
4-Piece Price Inc. Seat			**£459.00 Exc. VAT**	**£550.80 Inc. VAT**

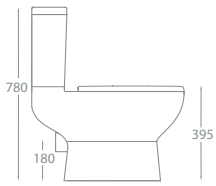

Arizona Back-to-Wall

10 YEAR MANUFACTURERS GUARANTEE

Bath Components	Dimensions	Ref.	Exc. VAT	Inc. VAT
Ascent Premier Hinged & Inline Shower Door	1200 x 2000mm (H)	PR202HDPSC	£706.00	**£847.20**
Ascent Premier Side Panel	800 x 2000mm (H)	PR208SPPSC	£291.00	**£349.20**
Genesis 40mm Low Profile Cast Stone Tray	1200 x 800mm	GEN12/8	£257.00	**£308.40**
Ascent 90mm Shower Trap & Waste	-	TAST1CP-K	£13.00	**£15.60**
Nevada Rainfall Shower Head	500 x 200mm	FLS-8110A	£235.00	**£282.00**
Ebony Square Twin Thermo Shower Valve	-	EB-SQR-2X1W	£189.00	**£226.80**

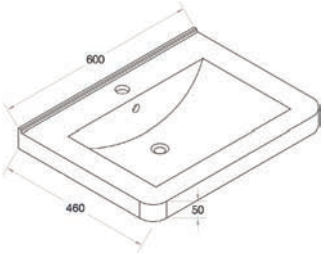

Furniture Components	Dimensions	Ref.	Exc. VAT	Inc. VAT
Cornell 60 2-Drawer Base Unit - Textured Grey	596 x 440 x 800mm	CR60BUTG	£619.00	**£742.80**
Cornell 60 Ceramic Basin - 1TH Only	600 x 460mm	CR60BAS	£171.00	**£205.20**
Arizona Basin Mono inc. Click-Clack Waste	-	ASC-9052W	£92.00	**£110.40**

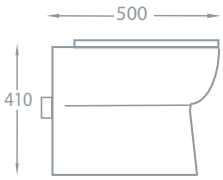

WC Components	Dimensions	Ref.	Exc. VAT	Inc. VAT
Cornell 55 Slim WC Base Unit - Textured Grey	550 x 200 x 800mm	CR55WCTG	£300.00	**£360.00**
Arizona Back-to-Wall Pan & Soft Close Seat		ARIOLI-003	£257.00	**£308.40**
Genesis Concealed Cistern - Dual Flush		GEN-CONC	£54.00	**£64.80**
Total Suite Price	**£3,184.00 Exc. VAT**		**£3,820.80 Inc. VAT**	

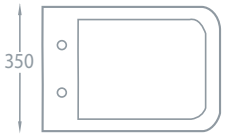

Eton 450 Basin with Semi-Pedestal (1TH Only)

Eton Rimless Back-to-Wall Pan & Soft Close Seat

Total Suite Price *(Including Shower Kit)*	£1,569.00 Exc. VAT	**£1,882.80 Inc. VAT**
Total Suite Price *(Excluding Shower Kit)*	£1,274.00 Exc. VAT	**£1,528.80 Inc. VAT**
4-Piece Price *(550mm Basin)*	£413.00 Exc. VAT	**£495.60 Inc. VAT**

Eton Rimless

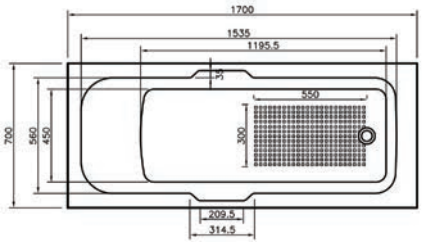

5 Bath Options Available:

- 1500 x 700mm - Superspec
- 1700 x 700mm - Standard
- 1700 x 700mm - Superspec
- 1700 x 800mm - Standard
- 1800 x 800mm - Standard

Bath Components	Dimensions	Ref.	Exc. VAT	Inc. VAT
Virginia Single Ended, Standard Spec Bath with Grips	1700 x 700mm	VIR17/7	£310.00	£372.00
Superstyle Acrylic Bath Front Panel - White	1700mm	S/STY17	£51.00	£61.20
Superstyle Acrylic Bath End Panel - White	700mm	S/STY7	£29.00	£34.80
Genesis 800mm Curved Bath Screen	1500mm (H) x 800mm (W)	QXG8SS800	£208.00	£249.60
QX Bath Pop-Up Waste	-	QXW1908	£40.00	£48.00
Urban Bath Filler	-	ALP-9074	£141.00	£169.20
Ohio Round Shower Head	200mm Diameter	FLS-8002C	£56.00	£67.20
Ohio Shower Head Fixing Arm	400 x 24mm	FLS-801C	£47.00	£56.40
Ohio Twin Thermostatic Shower Valve with 1 Outlet *(Controls 1 Function)*	-	QX-OH-TW1W	£192.00	**£230.40**

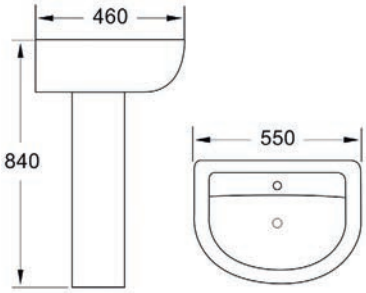

Basin Components

Eton 550 Ceramic Basin (1TH Only)*
Ref: ETO-007 Dimensions: 550 x 460mm
£85.00 Exc. VAT **£102.00 Inc. VAT**

Carolina Pedestal
Ref: UKB-P501
£52.00 Exc. VAT **£62.40 Inc. VAT**

Urban Basin Mono inc. Click-Clack Waste
Ref: ALP-9072W
£83.00 Exc. VAT **£99.60 Inc. VAT**

***Eton Basin also available in 450 & 500mm Width - See Below**

RIMLESS

Open Back WC

Closed Back WC

615mm Projection

SHORT PROJECTION

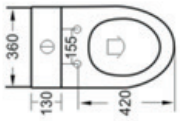

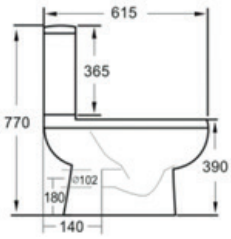

WC Components

Eton Rimless Open Back Close Coupled Pan & Soft Close Seat - *Pictured in main shot*
Ref: ETO-001
£206.00 Exc. VAT **£247.20 Inc. VAT**

Eton Close Coupled Cistern & Fittings
Ref: ETO-003
£70.00 Exc. VAT **£84.00 Inc. VAT**

Total Suite Price		£1,569.00 Exc. VAT	£1,882.80 Inc. VAT

Also Available	Dimensions	Ref.	Exc. VAT	Inc. VAT
Eton Rimless Closed Back Close Coupled Pan & Soft Close Seat	615mm Projection	ETO-002	£265.00	£318.00
Eton Close Coupled Cistern & Fittings	-	ETO-003	£70.00	£84.00
Eton Rimless Back-to-Wall Pan & Soft Close Seat	540mm Projection	ETO-004	£191.00	£229.20
Eton 450 Ceramic Basin (1TH Only)	450 x 360mm	ETO-005	£57.00	£68.40
Eton 500 Ceramic Basin (1TH Only)	500 x 400mm	ETO-006	£81.00	£97.20
Carolina Semi-Pedestal	-	UKB-P502	£48.00	£57.60

Pedestal Basin available in 3 Sizes

• 500 x 310mm • 554 x 483mm • 610 x 506mm

Grosvenor 545 x 440mm Semi-Recessed Basin (1 or 2TH)

Grosvenor Back-to-Wall Pan

Total Suite Price:	£1,504.00 Exc. VAT	**£1,804.80 Inc. VAT**
4-Piece Price *(Inc. Seat):*	£683.00 Exc. VAT	**£819.60 Inc. VAT**

Grosvenor

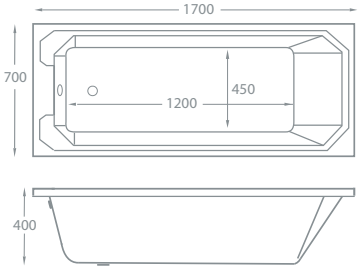

Bath Components	Dimensions	Ref.	Exc. VAT	Inc. VAT
Deco Single Ended Superspec Bath	1700 x 700mm	DECO17/7	£454.00	£544.80
QX Plain MDF Bath Front Panel - Gloss White	1700mm	163107	£127.00	£152.40
QX Plain MDF Bath End Panel - Gloss White	700mm	163101	£64.00	£76.80
QX Bath Pop-Up Waste	-	QXW1908	£40.00	£48.00
Edwardian Long Spout Bath Taps (Pair)	-	ASC-8043	£63.00	£75.60

3 Basin Size Options

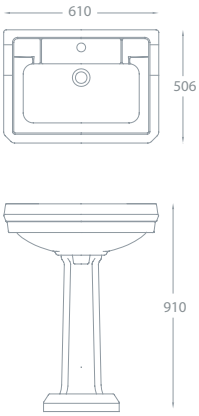

Basin Components

Grosvenor 500 Ceramic Basin (2TH)
Ref: GR-B112S-2 Dimensions: 500 x 310mm
£120.00 Exc. VAT **£144.00 Inc. VAT**

Grosvenor 554 Ceramic Basin (1 or 2TH)
Ref: GR-B112M-1/2 Dimensions: 554 x 483mm
£127.00 Exc. VAT **£152.40 Inc. VAT**

Grosvenor 610 Ceramic Basin (1 or 2TH)
Ref: GR-B112L-1/2 Dimensions: 610 x 506mm
£156.00 Exc. VAT **£187.20 Inc. VAT**

Grosvenor Pedestal
Ref: GR-P112
£59.00 Exc. VAT **£70.80 Inc. VAT**

Edwardian Long Spout Basin Taps (Pair)
Ref: ASC-8042
£63.00 Exc. VAT **£75.60 Inc. VAT**

QX Chrome Plug & Chain Basin Waste
Ref: QXW1901
£10.00 Exc. VAT **£12.00 Inc. VAT**

672mm Projection

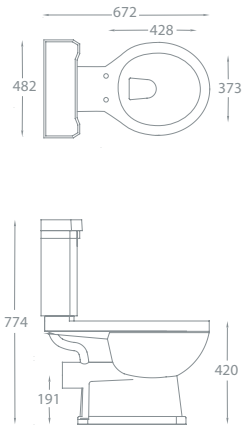

WC Components

Grosvenor Close Coupled Pan Only
Ref: GR-W112
£205.00 Exc. VAT **£246.00 Inc. VAT**

Grosvenor Close Coupled Lever Cistern & Fittings
Ref: GR-T112
£128.00 Exc. VAT **£153.60 Inc. VAT**

Nostalgic Wooden Soft Close Seat - Gloss White*
Ref: NOS-SEAT
£135.00 Exc. VAT **£162.00 Inc. VAT**

**Seat available in 7 finishes - See p76*

Total Suite Price - with 610mm Basin	£1,504.00 Exc. VAT	£1,804.80 Inc. VAT

Also Shown With:	Dimensions	Ref.	Exc. VAT	Inc. VAT
Options 50 Plain Mirror	500 x 740mm	19314	£81.00	£97.20
Royal Bajan Towel Rail - Chrome	800 x 500mm	ROY-8X5	£342.00	£410.40
Ohio Towel Ring - Chrome	152 x 183 x 75mm	KCO-004	£39.00	£46.80

Also Available:

Grosvenor Semi-Recessed Ceramic Basin (1 or 2TH)	545 x 440mm	GR-B212M-1/2	£161.00	£193.20
Grosvenor Back-to-Wall Pan Only	-	GR-W212	£191.00	£229.20
Nostalgic Wooden Soft Close Seat - Gloss White*	-	NOS-SEAT	£135.00	£162.00

Grosvenor Low Level

Basin Components	Dimensions	Ref.	Exc. VAT	Inc. VAT
Grosvenor 500 Ceramic Basin (2TH Only)	500 x 310mm	GR-B112S-2	£120.00	£144.00
QX Chrome Bottle Trap	-	QXBT07	£27.00	£32.40
Nostalgic Basin Taps (Pair)	-	ASC-8034	£68.00	£81.60
Click-Clack Basin Waste (Chrome) - *Slotted*	-	P506	£12.00	£14.40

WC Components	Dimensions	Ref.	Exc. VAT	Inc. VAT
Grosvenor Low Level Pan Only	-	GR-W512	£186.00	£223.20
Grosvenor Low Level Cistern, Internal Fittings & Flush Lever	-	GR-T512-1	£129.00	£154.80
Nostalgic Low Level Chrome Pipe	-	NOS-LLPIPE	£68.00	£81.60
Nostalgic Wooden Soft Close Seat - Gloss White	-	NOS-SEAT	£135.00	£162.00
Total Suite Price			**£745.00 Exc. VAT**	**£894.00 Inc. VAT**

Also Shown With:	Dimensions	Ref.	Exc. VAT	Inc. VAT
Bologna Mirror with Integrated Lights & Shelf	395 x 600 x 140mm	QXM-G6	£147.00	£176.40
Grosvenor Roll Holder	209 x 85 x 50mm	KRO-003	£48.00	£57.60
Grosvenor Towel Ring	151 x 65 x 173mm	KRO-004	£31.00	£37.20
Venetian Rail with Towel Shelf - Anthracite Finish*	1525 x 630mm	VEN-15X63	£499.00	£598.80
Traditional Radiator Valves (Pair) - Supplied Angled or Straight	-	RV/V710 or 707	£39.00	£46.80
*Venice Rail also available with radiator in White Finish	1525 x 630mm	VSW-15X63	£499.00	£598.80

Grosvenor 500 Basin can also be installed with the Grosvenor Pedestal - see p51 for Pedestal price

Grosvenor High Level

25 YEAR MANUFACTURERS GUARANTEE

Basin Components	Dimensions	Ref.	Exc. VAT	Inc. VAT
Grosvenor 610 Ceramic Basin (1 or 2TH)	610 x 506mm	GR-B112L-1/2	£156.00	£187.20
Grosvenor Traditional Basin Stand - Chrome	473(W) x 463(D) x 750(H)mm	GR-STD	£250.00	£300.00
QX Chrome Bottle Trap	-	QXBT07	£27.00	£32.40
Nostalgic Basin Taps (Pair)	-	ASC-8034	£68.00	£81.60
Click-Clack Basin Waste (Chrome) - *Slotted*	-	P506	£12.00	£14.40

WC Components	Dimensions	Ref.	Exc. VAT	Inc. VAT
Grosvenor High Level Pan Only	-	GR-W512	£186.00	£223.20
Grosvenor High Level Cistern & Internal Fittings	-	GR-T512-2	£129.00	£154.80
Grosvenor High Level Chrome Pipe, Chain & Wall Brackets	-	F512-2	£341.00	£409.20
Nostalgic Wooden Soft Close Seat - Gloss White	-	NOS-SEAT	£135.00	£162.00
Total Suite Price			**£1,304.00 Exc. VAT**	**£1,564.80 Inc. VAT**

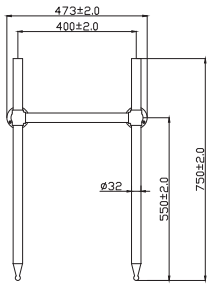

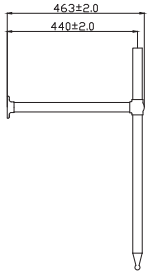

Also Shown With:	Dimensions	Ref.	Exc. VAT	Inc. VAT
Charlotte Mirror with Integrated Light	600 x 800 x 33mm	ASC6800LY	£285.00	£342.00
Grosvenor Roll Holder	209 x 85 x 50mm	KRO-003	£48.00	£57.60
Grosvenor Towel Ring	151 x 65 x 173mm	KRO-004	£31.00	£37.20
Monza Rail - Anthracite Finish*	1100 x 630mm	MON-11X63	£560.00	£672.00
Traditional Radiator Valves (Pair) - Supplied Angled or Straight	-	RV/V710 or 707	£39.00	£46.80
*Roma Rail also available with radiator in White Finish	1100 x 630mm	ROM-11X63	£560.00	£672.00

The Grosvenor Basin Stand is also suitable for use with the Grosvenor 550 Basin - see p51 for Basin price

Classic Nouveau

Bath Components	Dimensions	Ref.	Exc. VAT	Inc. VAT
Vienna Freestanding Bath & White Feet	1720 x 800mm	PB284	£2,765.00	**£3,318.00**
Ohio Floorstanding Bath Shower Mixer	-	ASC-8000	£368.00	**£441.60**

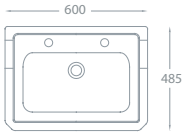

Basin Components	Dimensions	Ref.	Exc. VAT	Inc. VAT
Classic Nouveau 600 Ceramic Basin (2TH Only)	600 x 485mm	CLA-DE23	£120.00	**£144.00**
Classic Nouveau Pedestal	-	CLA-DE02	£54.00	**£64.80**
Nostalgic Basin Taps (pair)	-	ASC-8034	£68.00	**£81.60**
QX Plug & Chain Basin Waste - Chrome	-	QXW1901	£10.00	**£12.00**

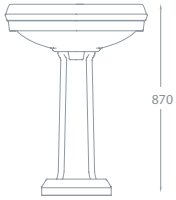

WC Components	Dimensions	Ref.	Exc. VAT	Inc. VAT
Classic Nouveau Close Coupled Pan Only	-	CLA-DE03	£152.00	**£182.40**
Classic Nouveau Close Coupled Lever Cistern & Fittings		CLA-DE04	£122.00	**£146.40**
Nostalgic Wooden Soft Close Seat - Gloss White		NOS-SEAT	£135.00	**£162.00**
Total Suite Price			**£3,794.00 Exc. VAT**	**£4,552.80 Inc. VAT**
4-Piece Price Inc. Seat			**£583.00 Exc. VAT**	**£699.60 Inc. VAT**

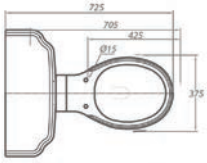

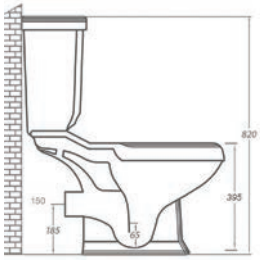

Also Shown With:	Dimensions	Ref.	Exc. VAT	Inc. VAT
Radius Round Mirror with LED Light	600mm Round	ASC6800LY	£285.00	**£342.00**

Guarantees: 10 Years on Ceramics - 2 Years on Fittings • 5 Years on Radiator • 5 Years on Brassware - 2 Years on Valves/Plastics/Ancillary

Eden

10 YEAR MANUFACTURERS GUARANTEE

Bath Components	Dimensions	Ref.	Exc. VAT	Inc. VAT
Virginia Bath with Grips & Anti-Slip Base	1700 x 700mm	VIR17/7	£310.00	£372.00
Destiny MDF Bath Front Panel - Gloss White	1700mm	163003	£145.00	£174.00
Destiny MDF Bath Front Panel - Gloss White	700mm	163101	£72.00	£86.40
Charlotte Bath Filler	-	ASC-8924	£118.00	£141.60
QX Bath Pop-up Waste	-	QXW1908	£40.00	£48.00

Basin Components	Dimensions	Ref.	Exc. VAT	Inc. VAT
Eden 550 Ceramic Basin (1TH Only)	550 x 415mm	EDE-PU01	£93.00	£111.60
Eden Pedestal	-	EDE-PU02	£33.00	£39.60
Charlotte Basin Mono inc. Click-Clack Waste	-	ASC-8922W	£74.00	£88.80

WC Components SHORT PROJECTION	Dimensions	Ref.	Exc. VAT	Inc. VAT
Eden Close Coupled Pan Only	-	EDE-PU03	£167.00	£200.40
Eden Close Coupled Cistern & Fittings		EDE-PU04	£106.00	£127.20
Eden Premium Soft Close Seat		EDE-PU07	£77.00	£92.40
Total Suite Price	£1,235.00 Exc. VAT			£1,482.00 Inc. VAT
4-Piece Price Inc. Seat	£476.00 Exc. VAT			£571.20 Inc. VAT

Also Available

Eden Corner Cistern - for use with Eden C/C Pan	EDE-PU14	£155.00	£186.00
Eden/Nevada Semi-Pedestal	EDE-PU15	£38.00	£45.60

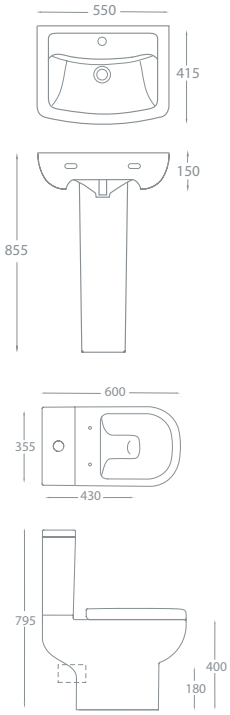

Nevada Back-to-Wall

Bath Components	Dimensions	Ref.	Exc. VAT	Inc. VAT
Vermont Standard Spec Shower Bath	1700 x 700mm (850 max)	VER17/7	£356.00	£427.20
Vermont Bath Acrylic Front Panel	1700mm	VER-17FP	£133.00	£159.60
Vermont Bath Acrylic End Panel	700mm	CALI-7EP	£76.00	£91.20
Vermont Shower Bath Screen	1400(H) x 800mm(W)	QXGVERBS800	£232.00	£278.40
QX Bath Pop-Up Waste	-	QXW1908	£40.00	£48.00
Nevada Bath Shower Mixer inc. Kit	-	NE03CP	£280.00	£336.00

Furniture Components	Dimensions	Ref.	Exc. VAT	Inc. VAT
Monica 60 2-Door Base Unit - Gloss White	590 x 450 x 800mm	M60BW	£213.00	£255.60
Monica 60 Slim WC Base Unit (No Top) - Gloss White	600 x 250 x 800mm	M60WC1PW	£187.00	£224.40
Monica 120 1-Piece Resin Basin (LH or RH)*	1200 x 260mm (460 max)	M1201P	£381.00	£457.20
Grosvenor Basin Mono inc. Click-Clack Waste	-	ASC-8492W	£85.00	£102.00

**Basin pictured Left Hand (LH)*

WC Components	Dimensions	Ref.	Exc. VAT	Inc. VAT
Nevada Back-to-Wall Pan Only	495mm Projection	NEV-TR05	£179.00	£214.80
Nevada Soft Close Seat Only	-	NEV-TR08	£48.00	£57.60
Genesis Concealed Plastic Cistern - Dual Flush	-	GEN-CONC	£54.00	£64.80
Total Suite Price	**£2,264.00 Exc. VAT**			**£2,716.80 Inc. VAT**

Also Shown With:

Eden 60 Mirrored Cabinet - Gloss White	600 x 160 x 600mm	ED60MCW	£282.00	£338.40

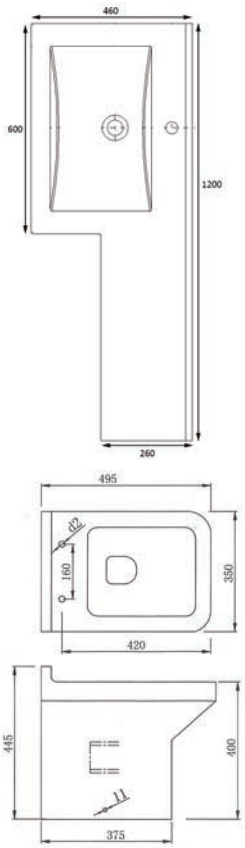

Nevada

10 YEAR MANUFACTURERS GUARANTEE

Bath Components	Dimensions	Ref.	Exc. VAT	Inc. VAT
Nevada Double Ended Standard Spec Bath	1700 x 800mm	NEV17/8	£402.00	£482.40
QX Plain MDF Bath Front Panel - Gloss White	1700mm	163107	£127.00	£152.40
Genesis 4-Fold Bath Screen - *LH or RH (RH Pictured)*	1500mm (H) x 1000mm (W)	QXG4FLDSQ	£410.00	£492.00
QX Bath Pop-Up Waste	-	QXW1908	£40.00	£48.00
Nevada Bath Shower Mixer inc. Shower Kit	-	NE03CP	£280.00	£336.00

Basin Components	Dimensions	Ref.	Exc. VAT	Inc. VAT
Nevada 550 Ceramic Basin (1TH Only)	550 x 425mm	NEV-TR01	£93.00	£111.60
Eden Pedestal	-	EDE-PU02	£33.00	£39.60
Grosvenor Basin Mono inc. Click-Clack Waste	-	ASC-8492W	£85.00	£102.00

WC Components SHORT PROJECTION	Dimensions	Ref.	Exc. VAT	Inc. VAT
Nevada Close Coupled Pan Only	-	NEV-TR03	£167.00	£200.40
Eden Close Coupled Cistern & Fittings		EDE-PU04	£106.00	£127.20
Nevada Soft Close Seat		NEV-TR08	£48.00	£57.60
Total Suite Price			**£1,791.00 Exc. VAT**	**£2,149.20 Inc. VAT**
4-Piece Price Inc. Seat			**£447.00 Exc. VAT**	**£536.40 Inc. VAT**
Also Available				
Nevada Back-to-Wall Pan Only	-	NEV-TR05	£179.00	£214.80
Nevada Soft Close Seat	-	NEV-TR08	£48.00	£57.60
Eden/Nevada Semi-Pedestal	-	EDE-PU15	£38.00	£45.60

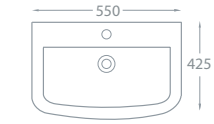

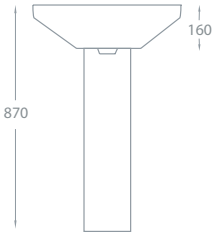

600mm Projection

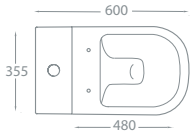

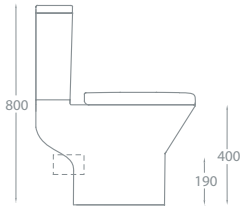

Carolina

10 YEAR MANUFACTURERS GUARANTEE

Bath Components	Dimensions	Ref.	Exc. VAT	Inc. VAT
Carolina Single Ended, Standard Spec Bath	1700 x 700mm	CARO17/7	£226.00	£271.20
Superstyle Acrylic Bath Front Panel - White	1700mm	S/STY17	£51.00	£61.20
Superstyle Acrylic Bath End Panel - White	700mm	S/STY7	£29.00	£34.80
Classic Nouveau 2-Fold Bath Screen	1400mm (H) x 860mm (W)	QX141BSPSC	£274.00	**£328.80**
QX Bath Pop-Up Waste	-	QXW1908	£40.00	£48.00
Montana Bath Filler	-	ASC-8184A	£131.00	£157.20
Ohio Round Shower Head	200mm Diameter	FLS-8002C	£56.00	£67.20
Ohio Shower Head Fixing Arm	400 x 24mm	FLS-801C	£47.00	£56.40
Ohio Twin Thermostatic Shower Valve with 1 Outlet *(Controls 1 Function)*	-	QX-OH-TW1W	£194.00	**£232.80**

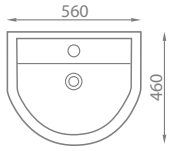

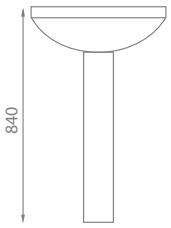

Basin Components	Dimensions	Ref.	Exc. VAT	Inc. VAT
Carolina 560 Ceramic Basin (1TH Only)	560 x 460mm	UKB-B501	£85.00	£102.00
Carolina Pedestal	-	UKB-P501	£52.00	£62.40
Montana Basin Mono inc. Click-Clack Waste	-	ASC-8182AW	£75.00	£90.00

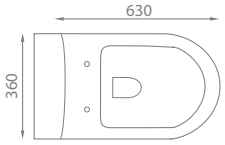

WC Components	Dimensions	Ref.	Exc. VAT	Inc. VAT
Carolina Close Coupled Pan & Soft Close Seat	-	UKB-W501	£206.00	£247.20
Carolina Close Coupled Cistern & Fittings	-	UKB-C501	£66.00	£79.20
Total Suite Price			**£1,531.00 Exc. VAT**	**£1,837.20 Inc. VAT**
4-Piece Price Inc. Seat			**£409.00 Exc. VAT**	**£490.80 Inc. VAT**

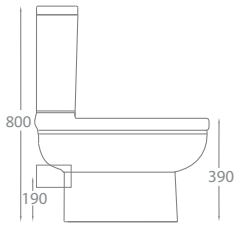

Carolina Wall-Hung

Bath Components	Dimensions	Ref.	Exc. VAT	Inc. VAT
Carolina Single Ended, Standard Spec Bath	1700 x 700mm	CARO17/7	£226.00	£271.20
Superstyle Acrylic Bath Front Panel - White	1700mm	S/STY17	£51.00	£61.20
Superstyle Acrylic Bath End Panel - White	700mm	S/STY7	£29.00	£34.80
Classic Nouveau 3-Fold Bath Screen	1400mm (H) x 860mm (W)	QX142BSPSC	£329.00	£394.80
QX Bath Pop-Up Waste	-	QXW1908	£40.00	£48.00
Montana Bath Filler	-	ASC-8184A	£131.00	£157.20
Ohio Round Shower Head	200mm Diameter	FLS-8002C	£56.00	£67.20
Ohio Shower Head Fixing Arm	400 x 24mm	FLS-801C	£47.00	£56.40
Ohio Twin Thermostatic Shower Valve with 1 Outlet *(Controls 1 Function)*		QX-OH-TW1W	£194.00	£232.80

Basin Components	Dimensions	Ref.	Exc. VAT	Inc. VAT
Carolina 500 Ceramic Basin (1TH Only)	500 x 400mm	UKB-B502	£81.00	£97.20
Carolina Semi-Pedestal	-	UKB-P502	£48.00	£57.60
Montana Basin Mono inc. Click-Clack Waste	-	ASC-8182AW	£75.00	£90.00

WC Components SHORT PROJECTION	Dimensions	Ref.	Exc. VAT	Inc. VAT
Eden 50 Slimline WC Base Unit - Gloss White	500 x 245mm	ED50SWCW	£191.00	£229.20
Carolina Back-to-Wall Pan & Soft Close Seat		UKB-W502	£191.00	£229.20
Genesis Concealed Cistern - Dual Flush		GEN-CONC	£54.00	£64.80
Total Suite Price			**£1,742.00 Exc. VAT**	**£2,090.40 Inc. VAT**

Also Available

Carolina 450 Basin (1TH Only) - For use with Pedestal	450 x 360mm	UKB-B503	£57.00	£68.40

Ebony

Bath Components	Dimensions	Ref.	Exc. VAT	Inc. VAT
Carolina Single Ended, Standard Spec Bath	1700 x 700mm	CARO17/7	£226.00	£271.20
Superstyle Acrylic Bath Front Panel - White	1700mm	S/STY17	£51.00	£61.20
Superstyle Acrylic Bath End Panel - White	700mm	S/STY7	£29.00	£34.80
Alpha Round Bath Screen	1360 x 800mm	QXA519PSC	£133.00	£159.60
Ebony Bath Taps (Pair)	-	ALP-8206M	£94.00	£112.80
QX Plug & Chain Bath Waste	-	QXW1905	£17.00	£20.40

Basin Components	Dimensions	Ref.	Exc. VAT	Inc. VAT
Ebony 530 Ceramic Basin (1 or 2TH)	530 x 450mm	BH-PB012/13	£44.00	£52.80
Ebony Pedestal	-	BH-PB003	£26.00	£31.20
Ebony Basin Mono inc. Click-Clack Waste	-	ALP-8202W	£76.00	£91.20

WC Components	Dimensions	Ref.	Exc. VAT	Inc. VAT
Ebony Close Coupled Pan Only	-	BH-CL001	£81.00	£97.20
Ebony Close Coupled Cistern & Fittings		BH-CL002	£59.00	£70.80
Ebony Standard Seat		108051	£24.00	£28.80
Total Suite Price		£859.00 Exc. VAT		£1,030.80 Inc. VAT
4-Piece Price Inc. Seat		£234.00 Exc. VAT		£280.80 Inc. VAT

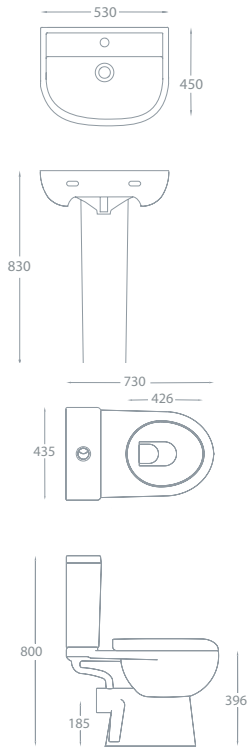

Solo

10 YEAR MANUFACTURERS GUARANTEE

Bath Components	Dimensions	Ref.	Exc. VAT	Inc. VAT
Idaho Superspec Corner Bath	1200 x 1200mm	IDAH1200	£631.00	£757.20
Idaho Corner Bath Front Panel	1200mm	IDAHPAN	£260.00	£312.00
Ohio 1TH Bath Filler	-	OH08CP	£176.00	£211.20
QX Bath Pop-Up Waste	-	QXW1908	£40.00	£48.00

Bath Also Available:

Whirlpool

ascent SUPERSPEC

Basin Components	Dimensions	Ref.	Exc. VAT	Inc. VAT
Solo 390 Basin (1TH Only)	390 x 390mm	AP-PB012	£87.00	£104.40
Ebony Pedestal	-	BH-PB003	£26.00	£31.20
Ebony Basin Mono Inc. Click-Clack Waste	-	ALP-8202W	£76.00	£91.20

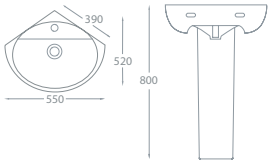

WC Components	Dimensions	Ref.	Exc. VAT	Inc. VAT
Solo Close Coupled Corner Pan Only	-	AP-CL001	£102.00	£122.40
Solo Close Coupled Corner Cistern & Fittings	-	AP-CL007	£152.00	£182.40
QX Wood Moulded Seat	-	21230001	£31.00	£37.20
Total Suite Price		**£1,581.00 Exc. VAT**		**£1,897.20 Inc. VAT**
4-Piece Price Inc. Standard Seat		**£398.00 Exc. VAT**		**£477.60 Inc. VAT**

Contract 4-Pieces

Ebony 4-Piece

Description	Exc. VAT	Inc. VAT
Close Coupled Pan, Cistern & Soft Close Seat	£193.00	£231.60
530 x 450 Basin & Pedestal (1 or 2TH)	£70.00	£84.00
4-Piece Total	£263.00	£315.60

Carolina 4-Piece

Description	Exc. VAT	Inc. VAT
Close Coupled Pan, Cistern & Soft Close Seat	£272.00	£326.40
560 x 460 Basin & Pedestal (1TH Only)	£137.00	£164.40
4-Piece Total	£409.00	£490.80

Eton 4-Piece

Description	Exc. VAT	Inc. VAT
Close Coupled Open-Sided* Pan, Cistern & Soft Close Seat	£276.00	£331.20
550 x 460 Basin & Pedestal (1TH Only)	£137.00	£164.40
4-Piece Total	£413.00	£495.60
*Pan also available Closed-Sided	£335.00	£402.00

Ebony Lever Handle

Cistern is Bottom Fed

Ebony Low Level WC

	Ref.	Exc. VAT	Inc. VAT
Ebony Low Level Pan	BH-01	£121.00	£145.20
Ebony Low Level Lever Cistern & Fittings	BH-03	£89.00	£106.80
Ebony Soft Close Seat	YHUF	£53.00	£63.60
Low Level WC Total		£263.00	£315.60

Comfort Options

Designed with elevated height for easier access

10 YEAR MANUFACTURERS GUARANTEE

Close Coupled WC:

Pan Height - 450mm
Overall Height - 820mm
Projection - 660mm

Close Coupled WC:

Pan Height - 475mm
Overall Height - 865mm
Projection - 640mm

Comfort WC

	Ref.	Exc. VAT	Inc. VAT
Comfort Close Coupled Pan Only	COM-01	£201.00	£241.20
Comfort Close Coupled Cistern	COM-03	£105.00	£126.00
Ebony Soft Close Seat	YHUF	£53.00	£63.60
Comfort WC Total		£359.00	£430.80

Full range of Comfort Accessories available on p115-116

Rimini Rimless Comfort WC

	Ref.	Exc. VAT	Inc. VAT
Rimini Rimless Close Coupled Open Back Raised Pan & Soft Close Seat	TALL1343BH	£359.00	£430.80
Verona Close Coupled Cistern for Open Back Pan	VEN/R-OP04	£82.00	£98.40
Rimini Comfort WC Total		£441.00	£529.20

Close Coupled WC:

Pan Height - 450mm
Overall Height - 830mm
Projection - 620mm

Back-to-Wall WC:

Pan Height - 445mm
Projection - 540mm

Carolina Comfort WC

	Ref.	Exc. VAT	Inc. VAT
Carolina Comfort Close Coupled Pan & Soft Close Seat	UKB-W503	£231.00	£277.20
Carolina Close Coupled Cistern	UKB-C501	£66.00	£79.20
Carolina Comfort WC Total		£297.00	£356.40

Carolina Comfort Back-to-Wall

	Ref.	Exc. VAT	Inc. VAT
Carolina Comfort Back-to-Wall Pan & Soft Close Seat	UKB-W505	£226.00	£271.20

Comfort Options

Designed with elevated height for easier access

Cornell Rimless Comfort WC

	Ref.	Exc. VAT	Inc. VAT
Cornell Rimless Close Coupled Raised Pan & S/C Seat	CO-W425R	£266.00	**£319.20**
Cornell Close Coupled Cistern	CO-T125A	£125.00	**£150.00**
Cornell Rimless Comfort WC Total		£391.00	£469.20
Cornell Comfort Back-to-Wall Pan & Soft Close Seat *(Not Rimless)*	CO-W225H	£365.00	**£438.00**

Close Coupled WC:
Pan Height - 450mm
Overall Height - 885mm
Projection - 632mm

Back-to-Wall WC:
Pan Height - 450mm
Projection - 500mm

Roma Rimless Comfort WC

	Ref.	Exc. VAT	Inc. VAT
Roma Close Coupled Raised Pan & Soft Close Seat	RO-W158	£336.00	**£403.20**
Roma Close Coupled Cistern	RO-T158	£120.00	**£144.00**
Roma Comfort WC Total		£456.00	£547.20
Roma Back-to-Wall Pan & Soft Close Seat	RO-W258	£310.00	**£372.00**

Close Coupled WC:
Pan Height - 440mm
Overall Height - 845mm
Projection - 630mm

Back-to-Wall WC:
Pan Height - 445mm
Projection - 540mm

Oregon Comfort WC

	Ref.	Exc. VAT	Inc. VAT
Oregon Close Coupled Raised Pan & Soft Close Seat	ORE-1273P	£318.00	**£381.60**
Venice C/C Cistern for Open Sided Pan	VEN/R-OP04	£82.00	**£98.40**
Oregon Comfort WC Total		£400.00	£480.00

Close Coupled WC:
Pan Height - 430mm
Overall Height - 790mm
Projection - 590mm

Comfort Options

Designed with elevated height for easier access

NEW Aveiro Rimless Tall WC

	Ref.	Exc. VAT	Inc. VAT
Aveiro Rimless Close Coupled Tall Open-Sided Pan & S/C Seat	AVE-W206C	£295.00	**£354.00**
Aveiro Close Coupled Cistern	AVE-C506	£100.00	**£120.00**
Aveiro Rimless Comfort WC Total		£395.00	£474.00
Aveiro Rimless Tall Back-to-Wall Pan & Soft Close Seat	AVE-W208C	£291.00	**£349.20**

Close Coupled WC:
Pan Height - 455mm
Overall Height - 875mm
Projection - 595mm

Back-to-Wall WC:
Pan Height - 455mm
Projection - 480mm

NEW Evora Rimless Tall WC

	Ref.	Exc. VAT	Inc. VAT
Evora Rimless Close Coupled Tall Open-Sided Pan & S/C Seat	EVO-W410C	£263.00	**£315.60**
Evora Close Coupled Cistern	EVO-C402	£100.00	**£120.00**
Evora Rimless Comfort WC Total		£363.00	£435.60
Evora Rimless Tall Back-to-Wall Pan & Soft Close Seat	EVO-W412C	£258.00	**£309.60**

Close Coupled WC:
Pan Height - 460mm
Overall Height - 870mm
Projection - 615mm

Back-to-Wall WC:
Pan Height - 460mm
Projection - 495mm

NEW Estoril Rimless Tall WC

	Ref.	Exc. VAT	Inc. VAT
Estoril Rimless Close Coupled Tall Open-Sided Pan & S/C Seat	EST-W510C	£254.00	**£304.80**
Estoril Close Coupled Cistern	EST-C509	£100.00	**£120.00**
Estoril Rimless Comfort WC Total		£354.00	£424.80
Estoril Rimless Close Coupled Tall Closed-Sided Pan & S/C Seat	EST-W519C	£306.00	**£367.20**
Estoril Close Coupled Cistern	EST-C509	£100.00	**£120.00**
Estoril Rimless Comfort WC Total		£406.00	£487.20
Estoril Rimless Tall Back-to-Wall Pan & Soft Close Seat	EST-W511C	£254.00	**£304.80**

Open-Sided Close Coupled WC:
Pan Height - 430mm
Overall Height - 825mm
Projection - 615mm

Closed-Sided Close Coupled WC:
Pan Height - 455mm
Overall Height - 855mm
Projection - 615mm

Back-to-Wall WC:
Pan Height - 430mm
Projection - 510mm

Cloakroom Options

Good - Better - Best

Ebony Cloakroom

Pan Projection: 730mm

	Ref.	Exc. VAT	Inc. VAT
Ebony 510 x 230mm Cloak Basin (1TH/2TH)	BH16/15	£83.00	£99.60
QX Bottle Trap - Chrome	QXBT07	£27.00	£32.40
Ebony Close Coupled Pan Only	BH-CL001	£81.00	£97.20
Ebony Soft Close Seat Only	YHUF	£53.00	£63.60
Ebony Close Coupled Cistern & Fittings	BH-CL002	£59.00	£70.80
Ebony Cloakroom Total		£303.00	£363.60

Also Shown With:

Karma Basin Mono inc. Click-Clack Waste	KAR-01	£34.00	£40.80
Atlanta 50 Battery Operated Mirror	ASC12BA	£106.00	£127.20
Alpha Toilet Roll Holder	ALP-50733B	£14.00	£16.80
Alpha Towel Ring	ALP-50732	£13.00	£15.60

Carolina Cloakroom

Pan Projection: 630mm

	Ref.	Exc. VAT	Inc. VAT
Eden 40 Wall-Hung Base Unit	ED40WW	£173.00	£207.60
Eden 40 Resin Basin (1TH Only)	ED40BS	£76.00	£91.20
Carolina Close Coupled Pan & S/C Seat	UKB-W501	£206.00	£247.20
Carolina Close Coupled Cistern & Fittings	UKB-C501	£66.00	£79.20
Carolina Cloakroom Total		£521.00	£625.20

Also Shown With:

Ebony Mini Basin Mono inc. Waste	ALP-8202MW	£66.00	£79.20
Atlanta 50 Battery Operated Mirror	ASC12BA	£106.00	£127.20
Alpha Toilet Roll Holder	ALP-50733B	£14.00	£16.80
Alpha Towel Ring	ALP-50732	£13.00	£15.60

Rimini Cloakroom

Pan Projection: 638mm

	Ref.	Exc. VAT	Inc. VAT
Urban 40 Floorstanding Base Unit	URB40W	£163.00	£195.60
Eden 40 Resin Basin (1TH Only)	ED40BS	£76.00	£91.20
Rimini Close Coupled Pan & S/C Seat	RIM-01343B	£275.00	£330.00
Verona (Open) Close Coupled Cistern	VEN/R-OP04	£82.00	£98.40
Rimini Cloakroom Total		£596.00	£715.20

Also Shown With:

Charlotte Mini Basin Mono inc. Waste	ASC-8922MW	£68.00	£81.60
Atlanta 50 Battery Operated Mirror	ASC12BA	£106.00	£127.20
Alpha Toilet Roll Holder	ALP-50733B	£14.00	£16.80
Alpha Towel Ring	ALP-50732	£13.00	£15.60

Vanity Basins

Round Inset & Square Counter Top Options

10 YEAR MANUFACTURERS GUARANTEE

Ebony Inset Ceramic Vanity Basin (1TH Only)

Ref: BH26	Dimensions: 570 x 475mm
£94.00 Exc. VAT	**£112.80 Inc. VAT**

Opal Inset Ceramic Vanity Basin (1TH Only)

Ref: CB2001	Dimensions: 510 x 445mm
£73.00 Exc. VAT	**£87.60 Inc. VAT**

Roma Round Inset Ceramic Vanity Basin (No Tap Holes)

Ref: CB5001	Dimensions: 390mm Round
£74.00 Exc. VAT	**£88.80 Inc. VAT**

Aston Ceramic Vanity Basin (1TH Only)

150mm High

Ref: CB102	Dimensions: 415 x 415mm
£85.00 Exc. VAT	**£102.00 Inc. VAT**

Portland Ceramic Vanity Basin (1TH Only)

155mm High

Ref: CB117	Dimensions: 470 x 400mm
£107.00 Exc. VAT	**£128.40 Inc. VAT**

Ebony Square Ceramic Vanity Basin (No Tap Holes)

165mm High

Ref: UKB1050	Dimensions: 535 x 395mm
£98.00 Exc. VAT	**£117.60 Inc. VAT**

Vanity Basins

Ceramic Round Counter Top Basins

Ebony Ceramic Vessel Basin (No Tap Holes)

170mm High

Ref: CL-1027B Dimensions: 400mm Round

£75.00 Exc. VAT **£90.00 Inc. VAT**

Parma Ceramic Black Vanity Basin (No Tap Holes)

170mm High

Ref: CB219BK Dimensions: 430mm Round

£221.00 Exc. VAT **£265.20 Inc. VAT**

Radius Ceramic Vanity Basin (1TH)

145mm High

Ref: RAD-5002B Dimensions: 410mm Round

£87.00 Exc. VAT **£104.40 Inc. VAT**

Opal Ceramic Vanity Basin (No Tap Holes)

170mm High

Ref: CB772 Dimensions: 445mm Round

£119.00 Exc. VAT **£142.80 Inc. VAT**

Vanity Basins

Ceramic Counter Top Options

Harmony Ceramic Vanity Basin (No Tap Holes)

155mm High

Ref: CB241	Dimensions: 560 x 360mm
£108.00 Exc. VAT	**£129.60 Inc. VAT**

Helena Ceramic Vanity Basin (No Tap Holes)

195mm High

Ref: CB247	Dimensions: 600 x 370mm
£90.00 Exc. VAT	**£108.00 Inc. VAT**

Oregon 570 Ceramic Vanity Basin (1TH Only)

170mm High

Ref: UKB-110	Dimensions: 570 x 435mm
£88.00 Exc. VAT	**£105.60 Inc. VAT**

Oregon 620 Ceramic Vanity Basin (1TH Only)

200mm High

Ref: UKB-111	Dimensions: 620 x 500mm
£95.00 Exc. VAT	**£114.00 Inc. VAT**

Cornell Ceramic Vanity Basin (1TH)

140mm High

Ref: CB1023E	Dimensions: 555 x 435mm
£212.00 Exc. VAT	**£254.40 Inc. VAT**

Warwick Ceramic Vanity Basin (No Tap Holes)

145mm High

Ref: CB014	Dimensions: 420 x 420mm
£79.00 Exc. VAT	**£94.80 Inc. VAT**

Cloakroom Basins

Ceramic Cloakroom Basin Options

Ebony 360 Cloakroom Basin (1 or 2TH)

Ref: BH10/09	Dimensions: 360 x 250mm
£65.00 Exc. VAT	**£78.00 Inc. VAT**

Ebony 460 Cloakroom Basin (1 or 2TH)

Ref: BH12/11	Dimensions: 460 x 275mm
£73.00 Exc. VAT	**£87.60 Inc. VAT**

Ebony 520 Cloakroom Basin (1 or 2TH)

Ref: BH16/15	Dimensions: 520 x 245mm
£83.00 Exc. VAT	**£99.60 Inc. VAT**

Chrome Bottle Trap Options on p108

Ebony Offset Basin (1TH Only) - LH or RH

Ref: CL3068/3002	Dimensions: 420 x 280mm
£90.00 Exc. VAT	**£108.00 Inc. VAT**

Chrome Bottle Trap Options on p108

Ebony 'D' Shaped Cloakroom Basin (1TH Only)

Ref: BH14	Dimensions: 450 x 330mm
£73.00 Exc. VAT	**£87.60 Inc. VAT**

Carolina Cloakroom Basin (2TH Only)

Ref: UKB-B507-2	Dimensions: 360 x 261mm
£52.00 Exc. VAT	**£62.40 Inc. VAT**
Ref: UKB-B508-2	Dimensions: 453 x 285mm
£57.00 Exc. VAT	**£68.40 Inc. VAT**

2 Size Options:
360 x 261mm
453 x 285mm

Corner & Semi-Recessed Basins

Ceramic Corner & Semi-Recessed Basin Options

Ebony Corner Basin

Ref: BH07	Dimensions: 520 x 430 x 370mm
£80.00 Exc. VAT	**£96.00 Inc. VAT**

Carolina Corner Basin (1TH Only)

Ref: UKB-B506-1	Dimensions: 465 x 425 x 340mm
£62.00 Exc. VAT	**£74.40 Inc. VAT**

Carolina Semi-Recessed Basin (1TH Only)

Ref: UKB-B505	Dimensions: 520 x 420mm
£76.00 Exc. VAT	**£91.20 Inc. VAT**

150mm Overhang

Recess Req. 265mm

Opal Slim Semi-Recessed Basin (1TH Only)

Ref: CB819	Dimensions: 450 x 305mm
£133.00 Exc. VAT	**£159.60 Inc. VAT**

103mm Overhang

Recess Req. 202mm

Eden Semi-Recessed Basin (1TH Only)

Ref: EDE-PU11	Dimensions: 550 x 415mm
£107.00 Exc. VAT	**£128.40 Inc. VAT**

115mm Overhang

Recess Req. 300mm

Nevada Semi-Recessed Basin (1TH Only)

Ref: NEV-TR11	Dimensions: 550 x 428mm
£107.00 Exc. VAT	**£128.40 Inc. VAT**

120mm Overhang

Recess Req. 308mm

Semi-Recessed Basins

Designed for use with Modular Furniture

Verona Semi-Recessed Basin (1TH Only)

Ref: VER-IB205 Dimensions: 550 x 430mm

£146.00 Exc. VAT **£175.20 Inc. VAT**

137mm Overhang

Recess Req. 280mm

Grosvenor Semi-Recessed Basin (1 or 2TH)

Ref: GR-B212M-1/2 Dimensions: 545x 440mm

£161.00 Exc. VAT **£193.20 Inc. VAT**

167mm Overhang

Recess Req. 275mm

Rimini Semi-Recessed Basin (1TH Only)

Ref: RIM-IB206 Dimensions: 560 x 470mm

£118.00 Exc. VAT **£141.60 Inc. VAT**

145mm Overhang

Recess Req. 285mm

Q-Line and Ritz Modular Furniture Ranges available on p343-357

Back-to-Wall Pans

10 YEAR MANUFACTURERS GUARANTEE

Alpha Back-to-Wall Pan Only
Ref: ALP-BTW Projection: 540mm
£108.00 Exc. VAT **£129.60 Inc. VAT**

Alpha Soft Close Seat Only
Ref: ALP-SCL
£41.00 Exc. VAT **£49.20 Inc. VAT**

Ebony Back-to-Wall Pan Only
Ref: BH21 Projection: 535mm
£146.00 Exc. VAT **£175.20 Inc. VAT**

Ebony Soft Close Seat Only
Ref: YHUF
£53.00 Exc. VAT **£63.60 Inc. VAT**

Carolina Back-to-Wall Pan & Soft Close Seat
Ref: UKB-W502
Projection: 550mm
£191.00 Exc. VAT
£229.20 Inc. VAT

Carolina Comfort Height Back-to-Wall Pan & Soft Close Seat
Ref: UKB-W505 Projection: 540mm
£226.00 Exc. VAT **£271.20 Inc. VAT**

COMFORT HEIGHT

Eton Rimless Back-to-Wall Pan & Soft Close Seat
Ref: ETO-004
Projection: 540mm
£191.00 Exc. VAT
£229.20 Inc. VAT

Eden Back-to-Wall Pan Only
Ref: EDE-PU05 Projection: 485mm
£179.00 Exc. VAT **£214.80 Inc. VAT**

Eden Premium Soft Close Seat
Ref: EDE-PU07
£77.00 Exc. VAT **£92.40 Inc. VAT**

Nevada Back-to-Wall Pan Only
Ref: NEV-TR05 Projection: 495mm
£179.00 Exc. VAT **£214.80 Inc. VAT**

Nevada Soft Close Seat Only
Ref: NEV-TR08
£48.00 Exc. VAT **£57.60 Inc. VAT**

Arizona Back-to-Wall Pan & Soft Close Seat
Ref: ARIOLI-003
Projection: 500mm
£257.00 Exc. VAT
£308.40 Inc. VAT

Charlotte Back-to-Wall Pan Only
Ref: CHASOP-003 Projection: 505mm
£188.00 Exc. VAT **£225.60 Inc. VAT**

Charlotte Slim Soft Close Seat
Ref: ARCH-004
£79.00 Exc. VAT **£94.80 Inc. VAT**

Charlotte Back-to-Wall Pan Only
Ref: CHASOP-003 Projection: 505mm
£188.00 Exc. VAT **£225.60 Inc. VAT**

Charlotte Standard Soft Close Seat
Ref: ARCH-122
£76.00 Exc. VAT **£91.20 Inc. VAT**

Rimini Rimless Back-to-Wall Pan & Soft Close Seat
Ref: RIM-43BTW
Projection: 565mm
£267.00 Exc. VAT
£320.40 Inc. VAT

Back-to-Wall Pans

NEW Aveiro Rimless Back-to-Wall Pan & Soft Close Seat (395mm High)

Ref: AVE-W513C Projection: 480mm

£267.00 Exc. VAT **£320.40 Inc. VAT**

NEW Aveiro Rimless Tall Back-to-Wall Pan & Soft Close Seat (455mm High)

Ref: AVE-W205C Projection: 480mm

£291.00 Exc. VAT **£349.20 Inc. VAT**

NEW Evora Rimless Back-to-Wall Pan & Soft Close Seat (415mm High)

Ref: EVO-W402C Projection: 510mm

£206.00 Exc. VAT **£247.20 Inc. VAT**

NEW Evora Rimless Tall Back-to-Wall Pan & Soft Close Seat (460mm High)

Ref: EVO-W412C Projection: 495mm

£258.00 Exc. VAT **£309.60 Inc. VAT**

NEW Estoril Tall Rimless Back-to-Wall Pan & Soft Close Seat (430mm High)

Ref: EST-W511C

Projection: 510mm

£254.00 Exc. VAT **£304.80 Inc. VAT**

COMFORT HEIGHT

Grosvenor Back-to-Wall Pan Only

Ref: GR-W212 Projection: 520mm

£191.00 Exc. VAT **£229.20 Inc. VAT**

Nostalgic Wooden Soft Close Seat

Ref: NOS-SEAT

£135.00 Exc. VAT **£162.00 Inc. VAT**

Venice Rimless Back-to-Wall Pan & Soft Close Seat

Ref: VEN-M003

Projection: 565mm

£267.00 Exc. VAT

£320.40 Inc. VAT

Verona Rimless Back-to-Wall Pan & Soft Close Seat

Ref: VER-BW53

Projection: 560mm

£267.00 Exc. VAT

£320.40 Inc. VAT

Cornell Comfort Height Back-to-Wall Pan & Soft Close Seat

Ref: CO-W225H Projection: 500mm

£365.00 Exc. VAT **£438.00 Inc. VAT**

COMFORT HEIGHT

Oregon Rimless Back-to-Wall Pan & Soft Close Seat

Ref: OR-1273BWP

Projection: 540mm

£309.00 Exc. VAT

£370.80 Inc. VAT

Opal Rimless Back-to-Wall Pan & Soft Close Seat

Ref: OP-W252R

Projection: 560mm

£364.00 Exc. VAT

£436.80 Inc. VAT

Roma Rimless Comfort Height Back-to-Wall Pan & S/Close Seat

Ref: RO-W258

Projection: 540mm

£310.00 Exc. VAT

£372.00 Inc. VAT

COMFORT HEIGHT

Monza Rimless Back-to-Wall Pan & Soft Close Seat

Ref: MON-126B3

Projection: 560mm

£319.00 Exc. VAT

£382.80 Inc. VAT

Wall-Hung Options

Includes Rimless & Bidet Options

10 YEAR MANUFACTURERS GUARANTEE

NEW Aveiro Rimless Wall-Hung Pan & Soft Close Seat RIMLESS

Ref: AVE-W507C	Projection: 485mm
£281.00 Exc. VAT	**£337.20 Inc. VAT**

NEW Estoril Rimless Wall-Hung Pan & Soft Close Seat RIMLESS

Ref: UKB-W512C	Projection: 495mm
£273.00 Exc. VAT	**£327.60 Inc. VAT**

Rimini Rimless Wall-Hung Pan & Soft Close Seat RIMLESS

Ref: RIM-343WH	Projection: 485mm
£335.00 Exc. VAT	**£402.00 Inc. VAT**

Verona Rimless Wall-Hung Pan & Soft Close Seat RIMLESS

Ref: VER-WH09	Projection: 510mm
£284.00 Exc. VAT	**£340.80 Inc. VAT**

Monza Rimless Wall-Hung Pan & Soft Close Seat RIMLESS

Ref: MON-0503C	Projection: 530mm
£374.00 Exc. VAT	**£448.80 Inc. VAT**

Venice Rimless Wall-Hung Pan & Soft Close Seat RIMLESS

Ref: VEN-M009	Projection: 510mm
£280.00 Exc. VAT	**£336.00 Inc. VAT**

Oregon Rimless Wall-Hung Pan & Soft Close Seat RIMLESS

Ref: OR-M0513	Projection: 540mm
£335.00 Exc. VAT	**£402.00 Inc. VAT**

Opal Wall-Hung Pan &Soft Close Seat

Ref: OPB-2376	Projection: 550mm
£295.00 Exc. VAT	**£354.00 Inc. VAT**

Crea Square Wall-Hung Bidet

Ref: K114-010	Projection: 520mm
£329.00 Exc. VAT	**£394.80 Inc. VAT**

Dimensions:

Height:	1120-1290mm
Depth:	155-235mm
Width:	500mm

QX Wall-Hung Bidet Frame

Ref: K97-065
£193.00 Exc. VAT
£231.60 Inc. VAT

WC Seats & Plastic Cisterns

10 YEAR MANUFACTURERS GUARANTEE

Soft Close

Alpha Soft Close Seat

Ref: ALP-SCL

£41.00 Exc. VAT **£49.20 Inc. VAT**

Soft Close

Ebony Soft Close Seat

Ref: YHUF

£53.00 Exc. VAT **£63.60 Inc. VAT**

Soft Close

Available in 7 Wood Finishes:

Gloss White | Matt White | Dark Walnut | Denim | Graphite | Indigo | Cashmere

Nostalgic Wood Soft Close Seat

Ref: NOS-SEAT

£135.00 Exc. VAT

£162.00 Inc. VAT

Soft Close

Wood Lux Soft Close Seat

Ref: 20719569

£79.00 Exc. VAT **£94.80 Inc. VAT**

Ebony Standard Seat

Ref: 108051

£24.00 Exc. VAT **£28.80 Inc. VAT**

QX Moulded Wood Seat

Ref: 21230001

£31.00 Exc. VAT **£37.20 Inc. VAT**

Genesis Square Push Button Back Plate Only *For use with Genesis Concealed Cistern*

Ref: BP-SQRCP Finish: Chrome

£3.00 Exc. VAT **£3.60 Inc. VAT**

Push Button Flush Plate

Ref: CCPB01

£26.00 Exc. VAT

£31.20 Inc. VAT

WRAS APPROVED PRODUCT

Genesis Concealed Cistern

Cable controlled dual flush valve with chrome plated push button

Ref: GEN-CONC

Dimensions: 300(H) x 345(W) x 140(D)

£54.00 Exc. VAT **£64.80 Inc. VAT**

Flexible Pan Connector (300-600mm)

Ref: ZB38301DB

£25.00 Exc. VAT **£30.00 Inc. VAT**

Ascent Pneumatic Plastic Cistern

Ascent Pneumatic Concealed Cistern

Ref: ASC-CONC

Dimensions: 300(H) x 345(W) x 140(D)

£75.00 Exc. VAT **£90.00 Inc. VAT**

- Pneumatic Dual Flush Valve
- Fitted with EPS Foam Jacket
- Supplied with Chrome Plated Push Button
- Alternative Push-Button Options Available
  Detailed Below

Ascent Round Push Button

Ref: PB-RNDBK Finish: Matt Black

£17.00 Exc. VAT **£20.40 Inc. VAT**

Ascent Round Push Button

Ref: PB-RNDWH Finish: White

£16.00 Exc. VAT **£19.20 Inc. VAT**

Ohio Round Push Button Flush Plates

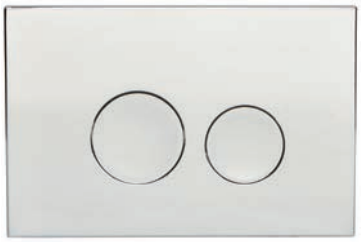

Chrome Finish

Ref: PB-OHCP

£41.00 Exc. VAT

£49.20 Inc. VAT

Matt Black Finish

Ref: PB-OHBK

£39.00 Exc. VAT

£46.80 Inc. VAT

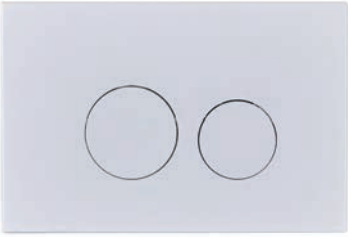

White Finish

Ref: PB-OHWH

£36.00 Exc. VAT

£43.20 Inc. VAT

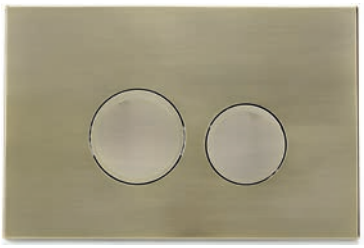

Brushed Brass Finish

Ref: PB-OHBB

£132.00 Exc. VAT

£158.40 Inc. VAT

Nevada Square Push Button Flush Plates

Chrome Finish

Ref: PB-NECP

£41.00 Exc. VAT

£49.20 Inc. VAT

Matt Black Finish

Ref: PB-NEBK

£39.00 Exc. VAT

£46.80 Inc. VAT

White Finish

Ref: PB-NEWH

£36.00 Exc. VAT

£43.20 Inc. VAT

Brushed Brass Finish

Ref: PB-NEBB

£132.00 Exc. VAT

£158.40 Inc. VAT

NOTE: Ascent Flush Plates are not compatible with the Aqua WC Frames

Aqua WC Frames & Flush Plates

Pneumatic Frame:

- Pneumatic-activated WC Concealed System
- Ultra Slim Depth - Only 11cm
- WC Frame with 40 x 40mm Profiles
- Brake in Feet
- Galvanised Rotatable Feet with 4 positions
- QUICK-FIX wall mounting brackets
- Ultra-low-noise NF-certified filling valve with brass connection tip
- Enhanced hygiene FRESH SYSTEM
- Cistern front flush button installation
- 4-point cistern water supply connection
- 3-way outlet waste adjustment
- Supports dual flushing systems

Mechanical Frame:

- WC Frame with 40 x 40mm Profiles
- Brake in Feet
- Galvanised Rotatable Feet with 4 positions
- Ultra-low-noise NF-certified filling valve with brass connection tip
- Enhanced hygiene FRESH SYSTEM
- Cistern top or front flush button installation
- 4-point cistern water supply connection
- 3-way outlet waste adjustment
- Supports dual flushing systems

FRESH SYSTEM
The Flush Plate can be easily removed to access this specially designed tablet dispenser, enabling upkeep of your toilets cleanliness

WC Frame Options	Dimensions (WxHxD)	Ref.	Exc. VAT	Inc. VAT
Aqua Pneumatic Frame - Dual Flush	510 x 1140-1340 x 110-160mm	S97-062	£325.00	**£390.00**
Aqua Mechanical Frame - Dual Flush	410 x 1130-1330 x 150-200mm	S97-046	£244.00	**£292.80**

Pneumatic Flush Plates

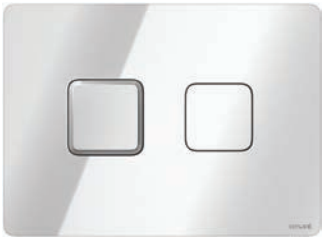

Accento Square Pneumatic Flush Plate

Chrome Finish	Ref: S97-057	
£83.00 Exc. VAT		**£99.60 Inc. VAT**
Black Glass Finish	Ref: S97-058	
£167.00 Exc. VAT		**£200.40 Inc. VAT**

Accento Round Pneumatic Flush Plate

Chrome Finish	Ref: S97-056	
£89.00 Exc. VAT		**£106.80 Inc. VAT**
Black Glass Finish	Ref: S97-053	
£165.00 Exc. VAT		**£198.00 Inc. VAT**

Mechanical Flush Plates

Presto Manual Flush Plate

Ref: K97-374	
£56.00 Exc. VAT	**£67.20 Inc. VAT**

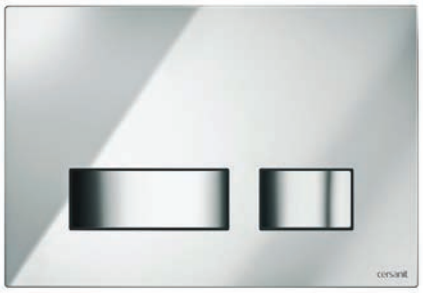

Movi Manual Flush Plate - Chrome

Ref: S97-026	
£36.00 Exc. VAT	**£43.20 Inc. VAT**

Movi Manual Flush Plate - Black Glass

Ref: S97-013	
£79.00 Exc. VAT	**£94.80 Inc. VAT**

Can be installed flush to wall

NEW Aveiro Taps

All Aveiro Taps Require Min. 0.5 Bar Pressure unless otherwise stated

5 YEAR MANUFACTURERS GUARANTEE

NEW Aveiro Basin Mono inc. Click-Clack Waste

Ref: ASC-9742W	Finish: Chrome
£67.00 Exc. VAT	**£80.40 Inc. VAT**

Aveiro Basin Mono

NEW Aveiro Bath Filler

Ref: ASC-9744	Finish: Chrome
£124.00 Exc. VAT	**£148.80 Inc. VAT**

NEW Aveiro Bath Shower Mixer inc. Shower Kit

Ref: ASC-9741	Finish: Chrome
£146.00 Exc. VAT	**£175.20 Inc. VAT**

NEW Estoril Taps

All Estoril Taps Require Min. 0.5 Bar Pressure unless otherwise stated

Estoril Basin Mono

NEW Estoril Basin Mono inc. Click-Clack Waste

Ref: ASC-9682W	Finish: Chrome
£71.00 Exc. VAT	**£85.20 Inc. VAT**

NEW Estoril Bath Filler

Ref: ASC-9684	Finish: Chrome
£105.00 Exc. VAT	**£126.00 Inc. VAT**

NEW Estoril Bath Shower Mixer inc. Shower Kit

Ref: ASC-9681	Finish: Chrome
£128.00 Exc. VAT	**£153.60 Inc. VAT**

NEW Evora Taps

All Evora Taps Require Min. 0.5 Bar Pressure unless otherwise stated

5 YEAR MANUFACTURERS GUARANTEE

NEW Evora Basin Mono inc. Click-Clack Waste

Ref: ASC-9662W	Finish: Chrome
£77.00 Exc. VAT	**£92.40 Inc. VAT**

Evora Basin Mono

The Evora range features a unique clicker button on the tap head to turn the water flow on and off.

NEW Evora Bath Filler

Ref: ASC-9664	Finish: Chrome
£113.00 Exc. VAT	**£135.60 Inc. VAT**

NEW Evora Bath Shower Mixer inc. Shower Kit

Ref: ASC-9661	Finish: Chrome
£137.00 Exc. VAT	**£164.40 Inc. VAT**

Empress & Seta Taps

All Empress & Seta Taps Require Min. 0.5 Bar Pressure unless otherwise stated

Empress Basin Mono

Empress Basin Mono inc. Click-Clack Waste

Ref: DG3962-439	Finish: Chrome
£246.00 Exc. VAT	**£295.20 Inc. VAT**

Height: 155mm Overall
131mm To Spout

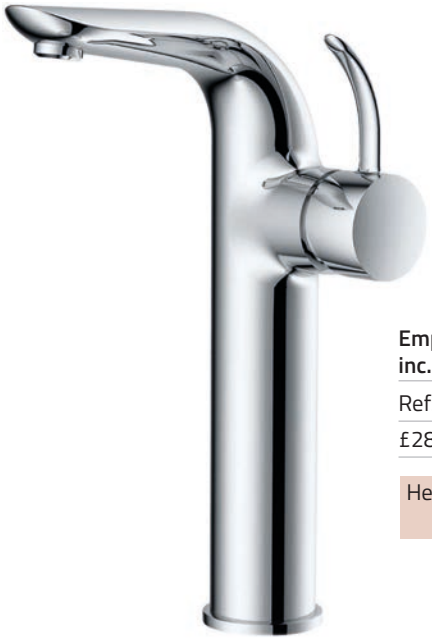

Empress Tall Basin Mono inc. Click-Clack Waste

Ref: DG3972-439	Finish: Chrome
£287.00 Exc. VAT	**£344.40 Inc. VAT**

Height: 295mm Overall
272mm To Spout

Empress Wall-Mounted Bath Shower Mixer inc. Shower Kit

Ref: DG3960-439	Finish: Chrome
£349.00 Exc. VAT	**£418.80 Inc. VAT**

Height: 311mm Overall
252mm To Spout

Seta Floorstanding Bath Shower Mixer inc. Shower Kit

Ref: DG6283-354

Finish: Chrome

£873.00 Exc. VAT

£1,047.60 Inc. VAT

Requires Minimum 1.0 bar pressure

Height: 945mm Overall
881.5mm To Spout

Seta Wall-Mounted Basin Mixer inc. Click-Clack Waste

Ref: DG6282-337	Finish: Chrome
£282.00 Exc. VAT	**£338.40 Inc. VAT**

Height: 200mm Overall
229mm From Wall

Seta Deck-Mounted Bath Shower Mixer inc. Shower Kit

Ref: DG6270-354	Finish: Chrome
£345.00 Exc. VAT	**£414.00 Inc. VAT**

Height: 215mm Overall
208mm To Spout

Grosvenor Taps

All Grosvenor Taps Require Min. 0.2 Bar Pressure unless otherwise stated

5 YEAR MANUFACTURERS GUARANTEE

Grosvenor Waterfall Basin Mono inc. Click-Clack Waste

Ref: ASC-8542W	Finish: Chrome
£97.00 Exc. VAT	**£116.40 Inc. VAT**

Grosvenor Basin Mono inc. Click-Clack Waste

Ref: ASC-8492W	Finish: Chrome
£85.00 Exc. VAT	**£102.00 Inc. VAT**

Height: 300mm Overall

Grosvenor Tall Basin Mono inc. Click-Clack Waste

Ref: ASC-8272BL	Finish: Chrome
£117.00 Exc. VAT	**£140.40 Inc. VAT**

Grosvenor 2TH Bath Filler

Ref: ASC-8494	Finish: Chrome
£133.00 Exc. VAT	**£159.60 Inc. VAT**

Grosvenor 3TH Basin OR Bath Filler with Waterfall Spout

Ref: ASC-8322A	Finish: Chrome
£161.00 Exc. VAT	**£193.20 Inc. VAT**

Grosvenor 4TH Bath Shower Mixer with Waterfall Spout inc. Shower Kit

Ref: ASC-8321A	Finish: Chrome
£208.00 Exc. VAT	**£249.60 Inc. VAT**

Grosvenor 2TH Bath Shower Mixer inc. Shower Kit

Ref: ASC-8491	Finish: Chrome
£157.00 Exc. VAT	**£188.40 Inc. VAT**

Grosvenor Floorstanding Single Lever Bath Shower Mixer (Fixed Spout)

Ref: ASC-8170B	Finish: Chrome
£444.00 Exc. VAT	**£532.80 Inc. VAT**

Height: 850mm to Spout 880mm Overall
Requires Minimum 1.0 bar pressure

Roma Taps

All Roma Taps Require Min. 0.2 Bar Pressure unless otherwise stated

Roma Mini Basin Mono inc. Click-Clack Waste

Ref: QXRO07CP

Finish: Chrome

£59.00 Exc. VAT **£70.80 Inc. VAT**

Roma Basin Mono inc. Click-Clack Waste

Ref: QXRO05CP

Finish: Chrome

£73.00 Exc. VAT **£87.60 Inc. VAT**

Roma Mini Basin Mono inc. Click-Clack Waste

Ref: QXRO07MB

Finish: Matt Black

£77.00 Exc. VAT **£92.40 Inc. VAT**

Roma Basin Mono inc. Click-Clack Waste

Ref: QXRO05MB

Finish: Matt Black

£83.00 Exc. VAT **£99.60 Inc. VAT**

Roma Mini Basin Mono inc. Click-Clack Waste

Ref: QXRO07MG

Finish: Matt Grey

£80.00 Exc. VAT **96.00 Inc. VAT**

Roma Basin Mono inc. Click-Clack Waste

Ref: QXRO05MG

Finish: Matt Grey

£94.00 Exc. VAT **£112.80 Inc. VAT**

Roma Bath Filler

Ref: QXRO03CP Finish: Chrome

£110.00 Exc. VAT **£132.00 Inc. VAT**

Roma Bath Filler

Ref: QXRO03MB Finish: Matt Black

£127.00 Exc. VAT **£152.40 Inc. VAT**

Roma Bath Filler

Ref: QXRO03MG Finish: Matt Grey

£143.00 Exc. VAT **£171.60 Inc. VAT**

Roma Taps

5 YEAR MANUFACTURERS GUARANTEE

All Roma Taps Require Min. 0.2 Bar Pressure unless otherwise stated

Roma Bath Shower Mixer inc. Shower Kit

Ref: QXRO04CP	Finish: Chrome
£107.00 Exc. VAT	**£128.40 Inc. VAT**

Roma Bath Shower Mixer inc. Shower Kit

Ref: QXRO04MB	Finish: Matt Black
£159.00 Exc. VAT	**£190.80 Inc. VAT**

Roma Bath Shower Mixer inc. Shower Kit

Ref: QXRO04MG	Finish: Matt Grey
£139.00 Exc. VAT	**£166.80 Inc. VAT**

Arizona Taps

All Arizona & Kansas Taps Require Min. 0.2 Bar Pressure unless otherwise stated

Arizona Basin Mono

Arizona Mini Basin Mono inc. Click-Clack Waste

Ref: ASC-9052MW Finish: Chrome

£88.00 Exc. VAT **£105.60 Inc. VAT**

Arizona Basin Mono inc. Click-Clack Waste

Ref: ASC-9052W Finish: Chrome

£92.00 Exc. VAT **£110.40 Inc. VAT**

Arizona Bath Filler

Ref: ASC-9054 Finish: Chrome

£148.00 Exc. VAT **£177.60 Inc. VAT**

Arizona Tall Basin Mono inc. Click-Clack Waste

Ref: ASC-9053T Finish: Chrome

£138.00 Exc. VAT **£165.60 Inc. VAT**

Arizona Floorstanding Single Lever Bath Shower Mixer

Ref: ASC-9070B Finish: Chrome

£325.00 Exc. VAT **£390.00 Inc. VAT**

Height: 852mm to Spout
870mm Overall

Requires Minimum 1.0 bar pressure

Arizona Bath Shower Mixer inc. Shower Kit

Ref: ASC-9051 Finish: Chrome

£172.00 Exc. VAT **£206.40 Inc. VAT**

Kansas Taps

All Kansas Taps Require Min. 0.2 Bar Pressure unless otherwise stated

5 YEAR MANUFACTURERS GUARANTEE

Kansas Basin Mono inc. Click-Clack Waste

Ref: ASC-9952BW	Finish: Matt Black
£107.00 Exc. VAT	**£128.40 Inc. VAT**

Kansas Basin Mono

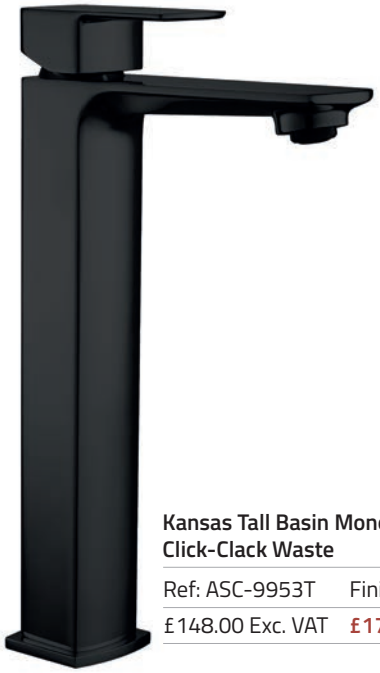

Kansas Tall Basin Mono inc. Click-Clack Waste

Ref: ASC-9953T	Finish: Matt Black
£148.00 Exc. VAT	**£177.60 Inc. VAT**

Kansas Bath Filler

Ref: ASC-9954B	Finish: Matt Black
£177.00 Exc. VAT	**£212.40 Inc. VAT**

Kansas Floorstanding Single Lever Bath Shower Mixer

Ref: ASC-9990B	Finish: Matt Black
£362.00 Exc. VAT	**£434.40 Inc. VAT**

Height: 852mm to Spout
870mm Overall

Requires Minimum 1.0 bar pressure

Kansas Bath Shower Mixer inc. Shower Kit

Ref: ASC-9951B	Finish: Matt Black
£217.00 Exc. VAT	**£260.40 Inc. VAT**

Tuscany Taps

All Tuscany Taps Require Min. 0.5 Bar Pressure unless otherwise stated

Tuscany Tall Basin Mono

Ref: QXG08BG Finish: Brushed Gold

£189.00 Exc. VAT **£226.80 Inc. VAT**

Height: 215.5mm to Spout
305mm Overall

Brushed Gold Click-Clack Waste available - See p108

Tuscany Basin Mono inc. Click-Clack Waste

Ref: QXG05BG Finish: Brushed Gold

£123.00 Exc. VAT **£147.60 Inc. VAT**

Tuscany Bath Filler

Ref: QXG03BG Finish: Brushed Gold

£145.00 Exc. VAT **£174.00 Inc. VAT**

Height: 1011mm to Spout
1143mm Overall

Tuscany Floorstanding Bath Shower Mixer inc. Kit

Ref: QXG88BG

Finish: Brushed Gold

£520.00 Exc. VAT

£624.00 Inc. VAT

Requires Minimum 1.0 bar pressure

Tuscany Bath Shower Mixer inc. Shower Kit

Ref: QXG04BG Finish: Brushed Gold

£215.00 Exc. VAT **£258.00 Inc. VAT**

Atlanta Taps

All Atlanta Taps Require Min. 0.5 Bar Pressure unless otherwise stated

Atlanta Basin Mono inc. Click-Clack Waste

Ref: BC-6922BB	Finish: Brushed Brass
£100.00 Exc. VAT	**£120.00 Inc. VAT**

Atlanta Basin Mono in Brushed Brass Finish

Atlanta Bath Filler

Ref: BC-6924BB	Finish: Brushed Brass
£156.00 Exc. VAT	**£187.20 Inc. VAT**

Atlanta Tall Basin Mono inc. Click-Clack Waste

Ref: BC-6912BB	Finish: Brushed Brass
£137.00 Exc. VAT	**£164.40 Inc. VAT**

Atlanta Bath Shower Mixer inc. Shower Kit

Ref: BC-6921BB	Finish: Brushed Brass
£207.00 Exc. VAT	**£248.40 Inc. VAT**

Charlotte Taps

All Charlotte Taps Require Min. 0.2 Bar Pressure unless otherwise stated

Charlotte Basin Mono

Charlotte Mini Basin Mono inc. Click-Clack Waste

Ref: ASC-8922MW	Finish: Chrome
£68.00 Exc. VAT	**£81.60 Inc. VAT**

Charlotte Basin Mono inc. Click-Clack Waste

Ref: ASC-8922W	Finish: Chrome
£74.00 Exc. VAT	**£88.80 Inc. VAT**

Charlotte Bath Filler

Ref: ASC-8924	Finish: Chrome
£118.00 Exc. VAT	**£141.60 Inc. VAT**

Charlotte Bath Shower Mixer inc. Shower Kit

Ref: ASC-8921	Finish: Chrome
£147.00 Exc. VAT	**£176.40 Inc. VAT**

Charlotte Single Lever Basin Mono inc. Click-Clack Waste

Ref: ASC-8912BM	Finish: Chrome
£75.00 Exc. VAT	**£90.00 Inc. VAT**

Urban Taps

All Urban Taps Require Min. 0.2 Bar Pressure unless otherwise stated

Urban Mini Basin Mono inc. Click-Clack Waste

Ref: ALP-9072MW	Finish: Chrome
£77.00 Exc. VAT	**£92.40 Inc. VAT**

Urban Basin Mono

Urban Basin Mono inc. Click-Clack Waste

Ref: ALP-9072W	Finish: Chrome
£83.00 Exc. VAT	**£99.60 Inc. VAT**

Urban Bath Filler

Ref: ALP-9074	Finish: Chrome
£141.00 Exc. VAT	**£169.20 Inc. VAT**

Urban Bath Shower Mixer inc. Shower Kit

Ref: ALP-9071	Finish: Chrome
£168.00 Exc. VAT	**£201.60 Inc. VAT**

Nigella Taps

All Nigella Taps Require Min. 0.2 Bar Pressure unless otherwise stated

Nigella Waterfall Spout Basin Mono

Nigella Mini Waterfall Basin Mono inc. Click-Clack Waste

Ref: ASC-8612AMW Finish: Chrome

£88.00 Exc. VAT **£105.60 Inc. VAT**

Nigella Waterfall Basin Mono inc. Click-Clack Waste

Ref: ASC-8612AW Finish: Chrome

£100.00 Exc. VAT **£120.00 Inc. VAT**

Nigella Bath Filler

Ref: ASC-8614A Finish: Chrome

£168.00 Exc. VAT **£201.60 Inc. VAT**

Nigella Top Spout Waterfall Basin Mono inc. Click-Clack Waste

Ref: ASC-8722AW Finish: Chrome

£118.00 Exc. VAT **£141.60 Inc. VAT**

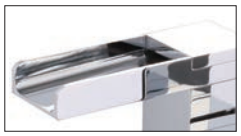

Waterfall Spout

Nigella Bath Shower Mixer inc. Shower Kit

Ref: ASC-8611A Finish: Chrome

£192.00 Exc. VAT **£230.40 Inc. VAT**

Nigella Waterfall Spout Floorstanding Single Lever Bath Shower Mixer (Fixed Spout)

Ref: ASC-8610AN Finish: Chrome

£398.00 Exc. VAT **£477.60 Inc. VAT**

Height: 860mm to Spout
877mm Overall

Requires Minimum 1.0 bar pressure

Opal Taps

All Opal Taps Require Min. 0.2 Bar Pressure unless otherwise stated

Opal Basin Mono
inc. Click-Clack Waste

Ref: ASC-8622W	Finish: Chrome
£88.00 Exc. VAT	**£105.60 Inc. VAT**

Opal Basin Mono

Opal Wall-Mounted Basin Filler

Ref: ASC-8559	Finish: Chrome
£107.00 Exc. VAT	**£128.40 Inc. VAT**

Opal Bath Filler

Ref: ASC-8624	Finish: Chrome
£141.00 Exc. VAT	**£169.20 Inc. VAT**

Opal Basin Taps (Pair)

Ref: ASC-8625	Finish: Chrome
£94.00 Exc. VAT	**£112.80 Inc. VAT**

Opal Bath Shower Mixer inc. Shower Kit

Ref: ASC-8621	Finish: Chrome
£165.00 Exc. VAT	**£198.00 Inc. VAT**

Opal Bath Taps (Pair)

Ref: ASC-8626	Finish: Chrome
£97.00 Exc. VAT	**£116.40 Inc. VAT**

Harmony Taps

All Harmony Taps Require Min. 0.2 Bar Pressure unless otherwise stated

Harmony Basin Mixer with Swivel Spout inc. Click-Clack Waste

Ref: ASC-8262W	Finish: Chrome
£103.00 Exc. VAT	**£123.60 Inc. VAT**

Harmony Basin Taps (Pair)

Ref: ASC-8265	Finish: Chrome
£81.00 Exc. VAT	**£97.20 Inc. VAT**

Harmony Bath Filler

Ref: ASC-8264	Finish: Chrome
£120.00 Exc. VAT	**£144.00 Inc. VAT**

Harmony Bath Taps (Pair)

Ref: ASC-8266	Finish: Chrome
£98.00 Exc. VAT	**£117.60 Inc. VAT**

Harmony Bath Shower Mixer inc. Shower Kit

Ref: ASC-8261	Finish: Chrome
£148.00 Exc. VAT	**£177.60 Inc. VAT**

Nostalgic Taps

All Nostalgic Taps Require Min. 0.2 Bar Pressure unless otherwise stated

Nostalgic Basin Mono inc. Click-Clack Waste

Ref: ASC-8032W	Finish: Chrome
£88.00 Exc. VAT	**£105.60 Inc. VAT**

Nostalgic Basin Mono

Nostalgic Bidet Mono inc. Pop-Up Waste

Ref: ASC-8033	Finish: Chrome
£74.00 Exc. VAT	**£88.80 Inc. VAT**

Nostalgic Basin Taps (Pair)

Ref: ASC-8034	Finish: Chrome
£68.00 Exc. VAT	**£81.60 Inc. VAT**

Nostalgic Bath Filler

Ref: ASC-8035

Finish: Chrome

£122.00 Exc. VAT

£146.40 Inc. VAT

Nostalgic Bath Taps (Pair)

Ref: ASC-8036	Finish: Chrome
£84.00 Exc. VAT	**£100.80 Inc. VAT**

Nostalgic Bath Shower Mixer inc. Shower Kit

Ref: ASC-8031

Finish: Chrome

£181.00 Exc. VAT

£217.20 Inc. VAT

Classic Nouveau Taps

All Classic Nouveau Taps Require Min. 0.2 Bar Pressure unless otherwise stated

Classic Nouveau Basin Mono

Classic Nouveau Basin Mono with Swivel Spout inc. Click-Clack Waste

Ref: ASC-8342W	Finish: Chrome
£87.00 Exc. VAT	**£104.40 Inc. VAT**

Classic Nouveau Basin Taps (Pair)

Ref: ASC-8345	Finish: Chrome
£82.00 Exc. VAT	**£98.40 Inc. VAT**

Classic Nouveau Bath Filler

Ref: ASC-8344	Finish: Chrome
£148.00 Exc. VAT	**£177.60 Inc. VAT**

Classic Nouveau Bath Taps (Pair)

Ref: ASC-8346	Finish: Chrome
£96.00 Exc. VAT	**£115.20 Inc. VAT**

Classic Nouveau Bath Shower Mixer inc. Shower Kit

Ref: ASC-8341	Finish: Chrome
£167.00 Exc. VAT	**£200.40 Inc. VAT**

Rimini & Vermont Taps

All Rimini & Vermont Taps Require Min. 0.2 Bar Pressure unless otherwise stated

5 YEAR MANUFACTURERS GUARANTEE

Rimini Basin Mono inc. Click-Clack Waste

Ref: RI05CP	Finish: Chrome
£149.00 Exc. VAT	**£178.80 Inc. VAT**

Vermont Basin Mono inc. Click-Clack Waste

Ref: VE01CP	Finish: Chrome
£130.00 Exc. VAT	**£156.00 Inc. VAT**

Ohio Taps

Ascot

All Ohio Taps Require Min. 0.2 Bar Pressure unless otherwise stated

Ohio Mini Basin Mono inc. Click-Clack Waste

Ref: OH06CP	Finish: Chrome
£88.00 Exc. VAT	**£105.60 Inc. VAT**

Ohio 1TH Bath Filler

Ref: OH08CP	Finish: Chrome
£176.00 Exc. VAT	**£211.20 Inc. VAT**

Requires 1.5 - 2.0 Bar Minimum Pressure

Ohio 2TH Bath Shower Mixer inc. Shower Kit

Ref: OH03CP	Finish: Chrome
£150.00 Exc. VAT	**£180.00 Inc. VAT**

Ohio 3-Hole Waterfall Bath Filler

Ref: OH11CP

Finish: Chrome

£271.00 Exc. VAT

£325.20 Inc. VAT

Alternative Handle Options:

Cross-Head Lever-Head

Can be used with the 3-Hole (OH11CP) and 5-Hole (OH10CP) Bath Fillers Only:

	Exc. VAT	Inc. VAT
For 3-Hole (OH11CP) add an additional:	£16.00	£19.20
For 5-Hole (OH10CP) add an additional:	£21.00	£25.20

Ohio Taps

5 YEAR MANUFACTURERS GUARANTEE

All Ohio Taps Require Min. 0.2 Bar Pressure unless otherwise stated

Ohio Floorstanding Single Lever Bath Shower Mixer inc. Shower Kit

Ref: ASC-8000 Finish: Chrome

£368.00 Exc. VAT **£441.60 Inc. VAT**

Height: 1060mm to Spout
1160mm Overall

Requires Minimum 1.0 bar pressure

Ebony Taps

All Ebony Taps Require Min. 0.2 Bar Pressure unless otherwise stated

Ebony Mini Basin Mono inc. Click-Clack Waste

Ref: ALP-8202MW	Finish: Chrome
£66.00 Exc. VAT	£79.20 Inc. VAT

Ebony Basin Mono inc. Click-Clack Waste

Ref: ALP-8202W	Finish: Chrome
£76.00 Exc. VAT	£91.20 Inc. VAT

Height:
235mm to Spout
300mm Overall

Ebony Tall Basin Mono inc. Click-Clack Waste

Ref: ALP-8202L	Finish: Chrome
£95.00 Exc. VAT	£114.00 Inc. VAT

Ebony Basin Taps (Pair)

Ref: ALP-8205M	Finish: Chrome
£86.00 Exc. VAT	£103.20 Inc. VAT

Ebony Bath Taps (Pair)

Ref: ALP-8206M	Finish: Chrome
£94.00 Exc. VAT	£112.80 Inc. VAT

Ebony Bath Filler

Ref: ALP-8204	Finish: Chrome
£120.00 Exc. VAT	£144.00 Inc. VAT

Ebony Bath Shower Mixer inc. Shower Kit

Ref: ALP-8201	Finish: Chrome
£148.00 Exc. VAT	£177.60 Inc. VAT

Montana Taps

All Montana Taps Require Min. 0.2 Bar Pressure unless otherwise stated

5 YEAR MANUFACTURERS GUARANTEE

Montana Mini Basin Mono inc. Click-Clack Waste

Ref: ASC-8182NW	Finish: Chrome
£67.00 Exc. VAT	**£80.40 Inc. VAT**

Montana Basin Mono inc. Click-Clack Waste

Ref: ASC-8182AW	Finish: Chrome
£75.00 Exc. VAT	**£90.00 Inc. VAT**

Montana Bidet Mono inc. Pop-Up Waste

Ref: ASC-8183A	Finish: Chrome
£86.00 Exc. VAT	**£103.20 Inc. VAT**

Montana Basin Taps (Pair)

Ref: ASC-8185A	Finish: Chrome
£89.00 Exc. VAT	**£106.80 Inc. VAT**

Montana Bath Taps (Pair)

Ref: ASC-8186A	Finish: Chrome
£102.00 Exc. VAT	**£122.40 Inc. VAT**

Montana Bath Filler

Ref: ASC-8184A	Finish: Chrome
£131.00 Exc. VAT	**£157.20 Inc. VAT**

Montana Wall-Mounted Basin Filler

Ref: ASC-8189	Finish: Chrome
£141.00 Exc. VAT	**£169.20 Inc. VAT**

Montana Bath Shower Mixer inc. Shower Kit

Ref: ASC-8181A	Finish: Chrome
£152.00 Exc. VAT	**£182.40 Inc. VAT**

Belmont & Venice Taps

Ascot

All Belmont Taps Require Min. 0.2 Bar Pressure unless otherwise stated
Venice High Pressure Taps Require Min. 1.5 Bar Pressure

Belmont Bath Filler

Ref: ALP-8324	Finish: Chrome
£161.00 Exc. VAT	**£193.20 Inc. VAT**

Belmont Mini Basin Mono inc. Click-Clack Waste

Ref: ALP-8322MW	Finish: Chrome
£73.00 Exc. VAT	**£87.60 Inc. VAT**

Overall Height: 128mm
Height to Spout: 72mm

Belmont Basin Mono inc. Click-Clack Waste

Ref: ALP-8322W	Finish: Chrome
£99.00 Exc. VAT	**£118.80 Inc. VAT**

Overall Height: 177mm
Height to Spout: 111mm

Belmont Bath Shower Mixer inc. Shower Kit

Ref: ALP-8321	Finish: Chrome
£184.00 Exc. VAT	**£220.80 Inc. VAT**

Requires 1.5 - 2.0 Bar Minimum Pressure

Venice High Pressure Basin Mono inc. Click-Clack Waste

Ref: VN05CP	Finish: Chrome
£144.00 Exc. VAT	**£172.80 Inc. VAT**

Venice High Pressure Bath Shower Mixer inc. Shower Kit

Ref: VN03CP	Finish: Chrome
£197.00 Exc. VAT	**£236.40 Inc. VAT**

Requires 1.5 - 2.0 Bar Minimum Pressure

Venice Basin Mono

Nevada Taps

5 YEAR MANUFACTURERS GUARANTEE

All Nevada Taps Require Min. 0.2 Bar Pressure unless otherwise stated

Nevada Basin Taps (Pair)

Ref: NE01CP	Finish: Chrome
£111.00 Exc. VAT	£133.20 Inc. VAT

Nevada Bath Taps (Pair)

Ref: NE02CP	Finish: Chrome
£115.00 Exc. VAT	£138.00 Inc. VAT

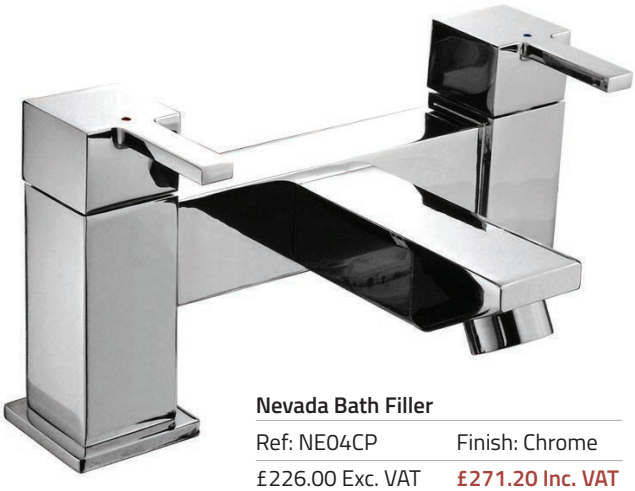

Nevada Bath Filler

Ref: NE04CP	Finish: Chrome
£226.00 Exc. VAT	£271.20 Inc. VAT

Requires 1.5 - 2.0 Bar Minimum Pressure

Nevada Bath Shower Mixer inc. Shower Kit

Ref: NE03CP	Finish: Chrome
£280.00 Exc. VAT	£336.00 Inc. VAT

Height: 259mm to Spout
295mm Overall

Nevada Tall Basin Mono inc. Click-Clack Waste

Ref: NE05CP
Finish: Chrome
£164.00 Exc. VAT
£196.80 Inc. VAT

Edwardian Taps

All Edwardian Taps Require Min. 0.1 Bar Pressure unless otherwise stated

Edwardian Basin Mono inc. Click-Clack Waste

Ref: ASC-8044W	Finish: Chrome
£77.00 Exc. VAT	**£92.40 Inc. VAT**

Edwardian Long Spout Basin Taps (Pair)

Ref: ASC-8042	Finish: Chrome
£63.00 Exc. VAT	**£75.60 Inc. VAT**

Edwardian Bidet Mono inc. Pop-Up Waste

Ref: ASC-8045	Finish: Chrome
£77.00 Exc. VAT	**£92.40 Inc. VAT**

Edwardian Long Spout Bath Taps (Pair)

Ref: ASC-8043	Finish: Chrome
£63.00 Exc. VAT	**£75.60 Inc. VAT**

Edwardian True 3/4 Bath Shower Mixer inc. Shower Kit

Ref: ASC-8046	Finish: Chrome
£191.00 Exc. VAT	**£229.20 Inc. VAT**

Height: 710mm
Excluding Tap

Pair of Chrome Tap Legs for Deck Mounted Bath Filler
Price does not include tap

Ref: LEG-02
Finish: Chrome
£248.00 Exc. VAT
£297.60 Inc. VAT

Victorian Taps

5 YEAR MANUFACTURERS GUARANTEE

All Victorian Taps Require Min. 0.1 Bar Pressure unless otherwise stated

Victorian Basin Mono inc. Click-Clack Waste

Ref: ASC-8063AW	Finish: Chrome
£77.00 Exc. VAT	**£92.40 Inc. VAT**

Victorian Bath Taps (Pair)

Ref: ASC-8065A	Finish: Chrome
£56.00 Exc. VAT	**£67.20 Inc. VAT**

Victorian Basin Taps (Pair)

Ref: ASC-8061A	Finish: Chrome
£53.00 Exc. VAT	**£63.60 Inc. VAT**

Height: 710mm
Excluding Tap

Pair of Chrome Tap Legs for Deck Mounted Bath Filler
Price does not include tap
Tap pictured is not available

Ref: LEG-02
Finish: Chrome
£248.00 Exc. VAT
£297.60 Inc. VAT

Victorian Bath Shower Mixer inc. Shower Kit

Ref: ASC-8060AN	Finish: Chrome
£123.00 Exc. VAT	**£147.60 Inc. VAT**

Karma Taps

All Karma Taps Require Min. 0.1 Bar Pressure unless otherwise stated

Karma Basin Mono inc. Click-Clack Waste

Ref: KAR-01 Finish: Chrome

£34.00 Exc. VAT **£40.80 Inc. VAT**

Karma Non-Concussive Basin Taps

Req. Min 0.2 bar pressure

Ref:KAR-UT01A Finish: Chrome

£94.00 Exc. VAT **£112.80 Inc. VAT**

Karma Bath Filler

Ref: KAR-02 Finish: Chrome

£73.00 Exc. VAT **£87.60 Inc. VAT**

Karma Bath Shower Mixer inc. Shower Kit

Ref: KAR-03 Finish: Chrome

£82.00 Exc. VAT **£98.40 Inc. VAT**

Ohio & Karma Exofills

All Exofills Require Min. 1 Bar Pressure unless otherwise stated

5 YEAR MANUFACTURERS GUARANTEE

Ohio Exofill with integrated Bath Mixer & Click-Clack Waste
No additional Bath Valves/Taps required

Ref: WBM01	Finish: Chrome
£135.00 Exc. VAT	**£162.00 Inc. VAT**

Karma Exofill Combined Bath Filler & Click-Clack Waste

Ref: QXW1912	Finish: Chrome
£80.00 Exc. VAT	**£96.00 Inc. VAT**

Must be used in conjunction with Mixer/ Shower Valve (Single Outlet Minimum)

See from p224 for Shower Valve & Kit options

Basin Wastes

QX Ceramic Click-Clack Basin Waste
Ref: CW-001
£24.00 Exc. VAT
£28.80 Inc. VAT

QX Swivel Basin Waste - Chrome
Slotted Ref: QXWA100
£17.00 Exc. VAT
£20.40 Inc. VAT

QX Click-Clack Basin Waste - Chrome
Slotted Ref: P506
£12.00 Exc. VAT
£14.40 Inc. VAT
Unslotted - Ref: QXW1016
£13.00 Exc. VAT
£15.60 Inc. VAT

QX Click-Clack Basin Waste - Brushed Gold
Slotted Ref: QXWA92BG
£22.00 Exc. VAT
£26.40 Inc. VAT

QX Square Click-Clack Basin Waste - Chrome
Slotted Ref: QXWA94
£11.00 Exc. VAT
£13.20 Inc. VAT
Unslotted - Ref: QXW2247
£12.00 Exc. VAT
£14.40 Inc. VAT

QX Nano Ultra Compact Click-Clack Basin Waste
Ref: 30120520
£75.00 Exc. VAT
£90.00 Inc. VAT

QX Plug & Chain Basin Waste - Chrome
Ref: QXW1901
£10.00 Exc. VAT
£12.00 Inc. VAT

Tap Wastes & Additional Items

QX Bath Pop-Up Waste
Ref: QXW1908 Finish: Chrome
£40.00 Exc. VAT **£48.00 Inc. VAT**

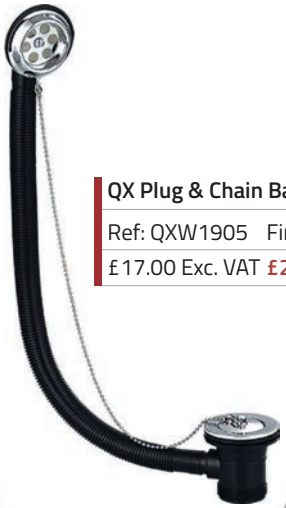

QX Plug & Chain Bath Waste
Ref: QXW1905 Finish: Chrome
£17.00 Exc. VAT **£20.40 Inc. VAT**

Click-Clack Bath Waste
Ref: ICW-08
Finish: Chrome
£50.00 Exc. VAT
£60.00 Inc. VAT
Designed for Freestanding Baths - Excluding Marino Bath

Click-Clack Slotted Bath Waste
Ref: ICW-01 Finish: Chrome
£42.00 Exc. VAT **£50.40 Inc. VAT**

QX Click-Clack Bath Waste - Brushed Gold
Ref: QX900EBB
Finish: Brushed Gold
£53.00 Exc. VAT
£63.60 Inc. VAT

QX Click-Clack Bath Waste - Black
Ref: QXWA900EK
Finish: Black
£40.00 Exc. VAT
£48.00 Inc. VAT

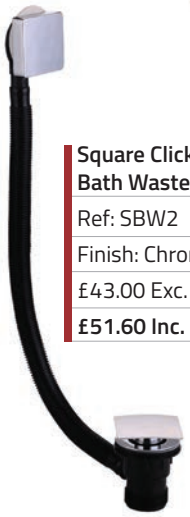

Square Click-Clack Bath Waste
Ref: SBW2
Finish: Chrome
£43.00 Exc. VAT
£51.60 Inc. VAT

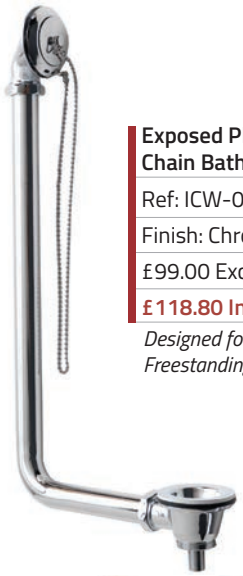

Exposed Plug & Chain Bath Waste
Ref: ICW-04
Finish: Chrome
£99.00 Exc. VAT
£118.80 Inc. VAT
Designed for Freestanding Baths

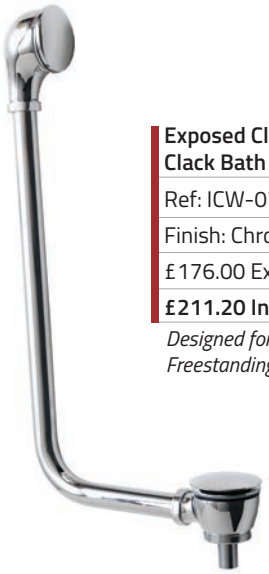

Exposed Click-Clack Bath Waste
Ref: ICW-07
Finish: Chrome
£176.00 Exc. VAT
£211.20 Inc. VAT
Designed for Freestanding Baths

Only suitable for 42mm Metal Pipe

Shallow Bath P-Trap
Ref: ICW-03 Finish: Chrome
£50.00 Exc. VAT **£60.00 Inc. VAT**

320mm Length

Ascot Square Bottle Trap
Ref: REF02 Finish: Chrome
£70.00 Exc. VAT **£84.00 Inc. VAT**

320mm Length

Ascot Round Bottle Trap
Ref: REF01 Finish: Chrome
£40.00 Exc. VAT **£48.00 Inc. VAT**

1.

2.

1 - Edwardian Handset
Ref: P102 Finish: Chrome
£20.00 Exc. VAT **£24.00 Inc. VAT**

2 - Victorian Handset
Ref: P101 Finish: Chrome
£15.00 Exc. VAT **£18.00 Inc. VAT**

Traditional Ceramic Lever
Ref: P700 Finish: Chrome
£15.00 Exc. VAT **£18.00 Inc. VAT**

QX Bottle Trap
Ref: QXBT07 Finish: Chrome
£27.00 Exc. VAT **£32.40 Inc. VAT**

Black Basin Overflow Ring
Ref: OFRBK Finish: Black
£3.00 Exc. VAT **£3.60 Inc. VAT**

Grosvenor Accessories

All Dimensions are Width x Depth x Height
Material: Brass

5 YEAR MANUFACTURERS GUARANTEE

Grosvenor Toilet Roll Holder
Ref: KRO-003 Finish: Chrome
Dimensions: 209mm x 85mm x 50mm
£48.00 Exc. VAT **£57.60 Inc. VAT**

Grosvenor Robe Hook
Ref: KRO-005 Finish: Chrome
Dimensions: 50mm x 65mm x 50mm
£21.00 Exc. VAT **£25.20 Inc. VAT**

Grosvenor Towel Bar
Ref: KRO-024 Finish: Chrome
Dimensions: 660mm x 85mm x 50mm
£53.00 Exc. VAT **£63.60 Inc. VAT**

Grosvenor Towel Ring
Ref: KRO-004 Finish: Chrome
Dimensions: 151mm x 65mm x 173mm
£31.00 Exc. VAT **£37.20 Inc. VAT**

Grosvenor Toilet Brush & Holder
Ref: KRO-010 Finish: Chrome
Dimensions: 110mm x 155mm x 355mm
£53.00 Exc. VAT **£63.60 Inc. VAT**

Grosvenor Glass Soap Dish & Holder
Ref: KRO-016 Finish: Chrome
Dimensions: 108mm x 140mm x 50mm
£37.00 Exc. VAT **£44.40 Inc. VAT**

Grosvenor Glass Cup & Holder
Ref: KRO-026 Finish: Chrome
Dimensions: 68mm x 120mm x 96mm
£37.00 Exc. VAT **£44.40 Inc. VAT**

Ohio Accessories

All Dimensions are Width x Depth x Height
Material: Brass

Ohio Toilet Roll Holder
Ref: KCO-003 Finish: Chrome
Dimensions: 188mm x 85mm x 70mm
£59.00 Exc. VAT **£70.80 Inc. VAT**

Ohio Toilet Roll Holder with Cover
Ref: KCO-033-A Finish: Chrome
Dimensions: 162mm x 115mm x 99mm
£54.00 Exc. VAT **£64.80 Inc. VAT**

Ohio Towel Ring
Ref: KCO-004 Finish: Chrome
Dimensions: 152mm x 75mm x 183mm
£39.00 Exc. VAT **£46.80 Inc. VAT**

Ohio Glass Cup & Holder
Ref: KCO-026 Finish: Chrome
Dimensions: 67mm x 118mm x 111mm
£41.00 Exc. VAT **£49.20 Inc. VAT**

Ohio Double Robe Hook
Ref: KCO-025 Finish: Chrome
Dimensions: 62mm x 74mm x 70mm
£39.00 Exc. VAT **£46.80 Inc. VAT**

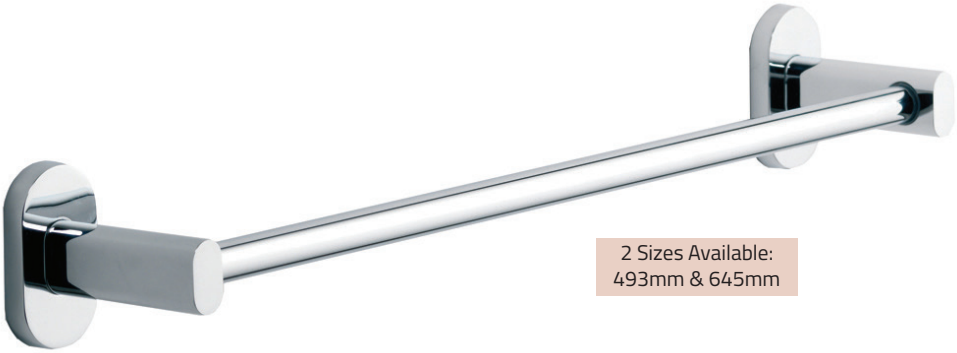

2 Sizes Available:
493mm & 645mm

Ohio Small Towel Bar
Ref: KCO-018 Finish: Chrome
Dimensions: 493mm x 85mm x 70mm
£66.00 Exc. VAT **£79.20 Inc. VAT**

Ohio Large Towel Bar
Ref: KCO-024 Finish: Chrome
Dimensions: 645mm x 85mm x 70mm
£68.00 Exc. VAT **£81.60 Inc. VAT**

Ohio Toilet Brush & Holder
Ref: KCO-010-A Finish: Chrome
Dimensions: 110mm x 130mm x 360mm
£62.00 Exc. VAT **£74.40 Inc. VAT**

Ohio Glass Shelf
Ref: KCO-008 Finish: Chrome
Dimensions: 609mm x 120mm x 70mm
£65.00 Exc. VAT **£78.00 Inc. VAT**

Ohio Large Soap Basket
Ref: KCO-002 Finish: Chrome
Dimensions: 203mm x 126mm x 70mm
£67.00 Exc. VAT **£80.40 Inc. VAT**

Utah Accessories

All Dimensions are Width x Depth x Height
Material: Brass & Aluminium

5 YEAR MANUFACTURERS GUARANTEE

Utah Toilet Roll Holder
Ref: KPY-013 Finish: Chrome
Dimensions: 163mm x 80mm x 35mm
£48.00 Exc. VAT **£57.60 Inc. VAT**

Utah Double Toilet Roll Holder
Ref: KPY-023 Finish: Chrome
Dimensions: 299mm x 80mm x 35mm
£53.00 Exc. VAT **£63.60 Inc. VAT**

Utah Towel Ring
Ref: KPY-004 Finish: Chrome
Dimensions: 148mm x 74mm x 170mm
£44.00 Exc. VAT **£52.80 Inc. VAT**

Utah Glass Cup & Holder
Ref: KPY-026 Finish: Chrome
Dimensions: 105mm x 126mm x 98mm
£40.00 Exc. VAT **£48.00 Inc. VAT**

Utah Glass Soap Dish & Holder
Ref: KPY-016 Finish: Chrome
Dimensions: 105mm x 126mm x 40mm
£40.00 Exc. VAT **£48.00 Inc. VAT**

Utah Small Towel Bar - 465mm
Ref: KPY-018 Finish: Chrome
Dimensions: 465mm x 80mm x 35mm
£60.00 Exc. VAT **£72.00 Inc. VAT**

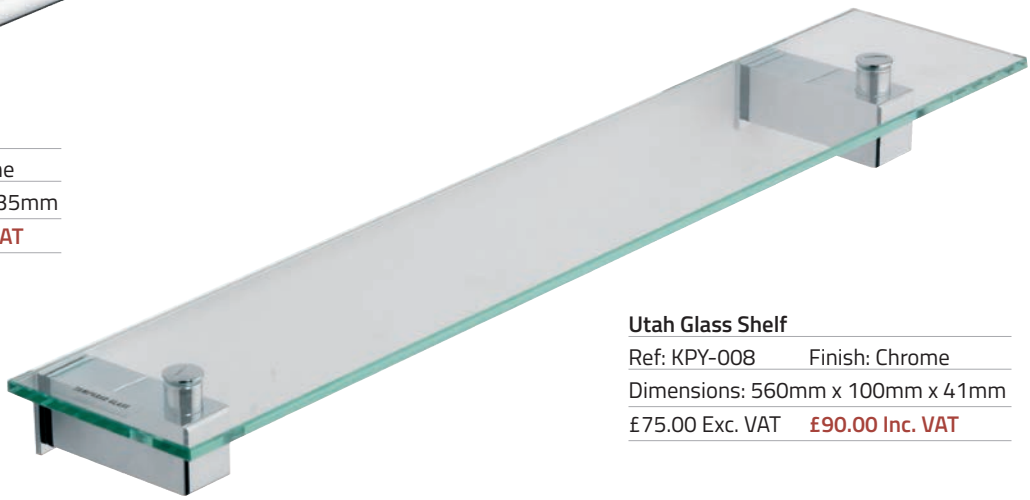

Utah Glass Shelf
Ref: KPY-008 Finish: Chrome
Dimensions: 560mm x 100mm x 41mm
£75.00 Exc. VAT **£90.00 Inc. VAT**

Utah Baskets

All Dimensions are Width x Depth x Height
Material: Brass

Utah Double Corner Basket
Ref: KBK-004-002 Finish: Chrome
Dimensions: 240mm x 165mm x 310mm
£100.00 Exc. VAT **£120.00 Inc. VAT**

Utah 2-Tier Corner Basket
Ref: KBK-004-0004 Finish: Chrome
Dimensions: 218mm x 210mm x 150mm
£103.00 Exc. VAT **£123.60 Inc. VAT**

Utah Shower Caddy
Ref: KBK-004-008 Finish: Chrome
Dimensions: 230mm x 105mm x 770mm
£228.00 Exc. VAT **£273.60 Inc. VAT**

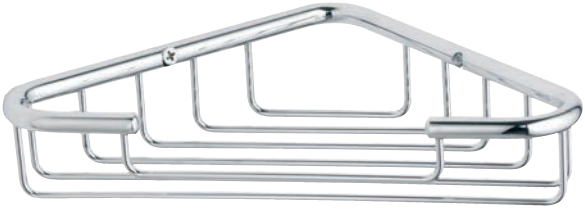

Utah Large Corner Basket
Ref: KBK-001-001 Finish: Chrome
Dimensions: 245mm x 190mm x 45mm
£47.00 Exc. VAT **£56.40 Inc. VAT**

Utah Deep Corner Basket
Ref: KBK-003-0008 Finish: Chrome
Dimensions: 235mm x 80mm x 175mm
£78.00 Exc. VAT **£93.60 Inc. VAT**

Utah 2-Tier Rectangular Basket
Ref: KBK-004-0006 Finish: Chrome
Dimensions: 250mm x 210mm x 310mm
£151.00 Exc. VAT **£181.20 Inc. VAT**

Utah Square Basket
Ref: KBK-002-006 Finish: Chrome
Dimensions: 130mm x 95mm x 35mm
£36.00 Exc. VAT **£43.20 Inc. VAT**

Kansas Accessories

5 YEAR MANUFACTURERS GUARANTEE

All Dimensions are Width x Depth x Height - *Depth Excludes Wall Fixing Bracket*

Kansas Toilet Roll Holder
Ref: QXDXB31K Finish: Black
Dimensions: 153mm x 79mm x 20mm
£39.00 Exc. VAT **£46.80 Inc. VAT**

Kansas Towel Ring
Ref: QXDXB30K Finish: Black
Dimensions: 220mm x 62mm x 20mm
£46.00 Exc. VAT **£55.20 Inc. VAT**

Kansas Robe Hook
Ref: QXDXB38K Finish: Black
Dimensions: 20mm x 30mm x 59.5mm
£22.00 Exc. VAT **£26.40 Inc. VAT**

Kansas Glass Soap Dish
Ref: QXDXB34K Finish: Black
Dimensions: 103mm x 103mm x 43mm
£48.00 Exc. VAT **£57.60 Inc. VAT**

Kansas Soap Basket
Ref: QXDXB35K Finish: Black
Dimensions: 120mm x 100mm x 34mm
£55.00 Exc. VAT **£66.00 Inc. VAT**

Kansas Glass Soap Dispenser
Ref: QXDXB46K Finish: Black
Dimensions: 73mm x 73mm x 180mm
£53.00 Exc. VAT **£63.60 Inc. VAT**

Kansas Glass WC Brush
Ref: QXDXB37K Finish: Black
Dimensions: 93mm x 93mm x 120mm*
£78.00 Exc. VAT **£93.60 Inc. VAT**

**Height Excludes Handle*

Kansas Towel Bar
Ref: QXDXB39K Finish: Black
Dimensions: 600mm x 65mm x 20mm
£81.00 Exc. VAT **£97.20 Inc. VAT**

Kansas Glass Tumbler
Ref: QXDXB32K Finish: Black
Dimensions: 69mm x 69mm x 85mm
£48.00 Exc. VAT **£57.60 Inc. VAT**

Kansas Double Towel Bar
Ref: QXDXB40K Finish: Black
Dimensions: 600mm x 110mm x 30mm
£105.00 Exc. VAT **£126.00 Inc. VAT**

Kansas Double Glass Tumbler
Ref: QXDXB33K Finish: Black
Dimensions: 195mm x 94mm x 85mm
£68.00 Exc. VAT **£81.60 Inc. VAT**

Kansas Glass Shelf
Ref: QXDXB42K Finish: Black
Dimensions: 500mm x 115mm x 8mm
£52.00 Exc. VAT **£62.40 Inc. VAT**

Alpha Accessories

All Dimensions are Width x Depth x Height

Alpha Toilet Roll Holder
Ref: ALP-50733B Finish: Chrome
Dimensions: 160mm x 60mm x 100mm
£14.00 Exc. VAT **£16.80 Inc. VAT**

Alpha Toilet Roll Holder with Lid
Ref: ALP-50733 Finish: Chrome
Dimensions: 130mm x 60mm x 140mm
£15.00 Exc. VAT **£18.00 Inc. VAT**

Alpha Glass Tumbler & Holder
Ref: ALP-50738 Finish: Chrome
Dimensions: 68mm x 110mm x 95mm
£12.00 Exc. VAT **£14.40 Inc. VAT**

Alpha Glass Soap Dish & Holder
Ref: ALP-50739 Finish: Chrome
Dimensions: 110mm x 120mm x 52mm
£12.00 Exc. VAT **£14.40 Inc. VAT**

Alpha Spare Roll Holder
Ref: ALP-50733D Finish: Chrome
Dimensions: 132mm x 70mm x 52mm
£13.00 Exc. VAT **£15.60 Inc. VAT**

Alpha Towel Ring
Ref: ALP-50732 Finish: Chrome
Dimensions: 155mm x 60mm x 180mm
£13.00 Exc. VAT **£15.60 Inc. VAT**

Alpha Single Towel Bar
Ref: ALP-50724 Finish: Chrome
Dimensions: 645mm x 73mm x 52mm
£18.00 Exc. VAT **£21.60 Inc. VAT**

Alpha Robe Hook
Ref: ALP-50735 Finish: Chrome
Dimensions: 90mm x 55mm x 52mm
£8.00 Exc. VAT **£9.60 Inc. VAT**

Alpha Double Towel Bar
Ref: ALP-50725 Finish: Chrome
Dimensions: 645mm x 120mm x 52mm
£29.00 Exc. VAT **£34.80 Inc. VAT**

Alpha Swivel Towel Bar
Ref: ALP-50725B Finish: Chrome
Dimensions: 470mm x 63mm x 52mm
£29.00 Exc. VAT **£34.80 Inc. VAT**

Alpha Soap Basket
Ref: ALP-50751 Finish: Chrome
Dimensions: 130mm x 118mm x 55mm
£23.00 Exc. VAT **£27.60 Inc. VAT**

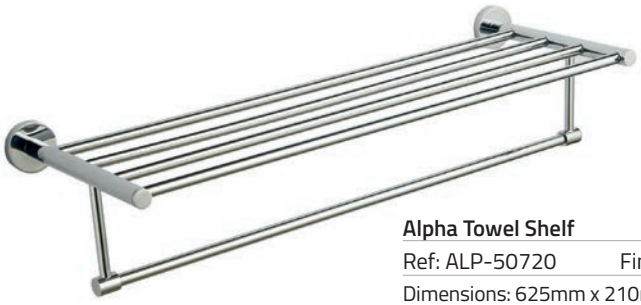

Alpha Towel Shelf
Ref: ALP-50720 Finish: Chrome
Dimensions: 625mm x 210mm x 130mm
£65.00 Exc. VAT **£78.00 Inc. VAT**

Alpha Glass Corner Shelf
Ref: ALP-50737B Finish: Chrome
Dimensions: 250mm x 250mm x 52mm
£14.00 Exc. VAT **£16.80 Inc. VAT**

Alpha WC Brush & Glass Holder
Ref: ALP-50750 Finish: Chrome
Dimensions: 115mm x 125mm x 380mm
£21.00 Exc. VAT **£25.20 Inc. VAT**

Alpha Glass Shelf
Ref: ALP-50737 Finish: Chrome
Dimensions: 520mm x 140mm x 52mm
£30.00 Exc. VAT **£36.00 Inc. VAT**

Comfort Accessories

All Dimensions are Width x Depth x Height

Alpha 300 Grab Bar
Ref: ALP-1016 Finish: Chrome
Dimensions: 350mm x 82mm x 80mm
£19.00 Exc. VAT **£22.80 Inc. VAT**

Alpha 500 Grab Bar
Ref: ALP-1018 Finish: Chrome
Dimensions: 500mm x 82mm x 80mm
£23.00 Exc. VAT **£27.60 Inc. VAT**

Comfort L-Grab Rail & Basket
Ref: KGB-002-0002 Finish: Chrome
Dimensions: 460mm x 127mm x 190mm
£98.00 Exc. VAT **£117.60 Inc. VAT**
Item is reversible ***Material: Brass***

Comfort Grab Rail
Ref: KGB-002-001 Finish: Chrome
Dimensions: 460mm x 127mm x 190mm
£68.00 Exc. VAT **£81.60 Inc. VAT**
Item is reversible ***Material: Brass***

Available 300, 400, 450 & 600mm Wide, Centre to Centre

Comfort 300 Grab Rail
Ref: KGB-A01-0010A Finish: White
Dimensions: 300mm x 79mm x 82mm
£42.00 Exc. VAT **£50.40 Inc. VAT**

Comfort 400 Grab Rail
Ref: KGB-A01-0010B Finish: White
Dimensions: 400mm x 79mm x 82mm
£48.00 Exc. VAT **£57.60 Inc. VAT**

Comfort 450 Grab Rail
Ref: KGB-A01-0010C Finish: White
Dimensions: 450mm x 79mm x 82mm
£52.00 Exc. VAT **£62.40 Inc. VAT**

Comfort 600 Grab Rail
Ref: KGB-A01-0010D Finish: White
Dimensions: 600mm x 79mm x 82mm
£57.00 Exc. VAT **£68.40 Inc. VAT**

Material: ABS, Aluminium & Stainless Steel

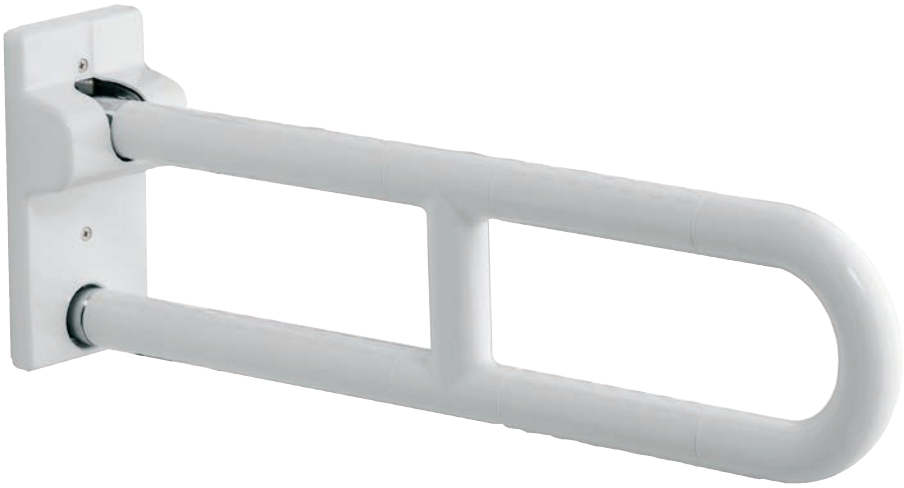

Comfort Folding Rail
Ref: KGB-A01-0025B Finish: White
Dimensions: 102mm x 700mm x 203mm
£226.00 Exc. VAT **£271.20 Inc. VAT**

Material: ABS, Aluminium & Stainless Steel

Comfort Accessories

All Dimensions are Width x Depth x Height

Comfort Single Hinged Arm & Roll Holder

Ref: 33675 Finish: Stainless Steel

Dimensions: 130 x 500 x 230mm

£158.00 Exc. VAT **£189.60 Inc. VAT**

Comfort Double Hinged Arm & Roll Holder

Ref: 35220 Finish: White

Dimensions: 130 x 500 x 230mm

£116.00 Exc. VAT **£139.20 Inc. VAT**

Comfort Curved Grab Rail

Ref: 19020MP Finish: Stainless Steel

Dimensions: 300mm

£115.00 Exc. VAT **£138.00 Inc. VAT**

Dimensions: 450mm

£132.00 Exc. VAT **£158.40 Inc. VAT**

Dimensions: 600mm

£140.00 Exc. VAT **£168.00 Inc. VAT**

Comfort Fold-Up Shower Seat & Legs

Ref: KOT-011-0005 Finish: White

Legs Adjustable from 340-500mm

£159.00 Exc. VAT **£190.80 Inc. VAT**

Max Weight Capacity: 204kg

Material: ABS & Stainless Steel

Suitable for 750 to 800mm Width Baths

Comfort Shower Seat for Bath

Ref: KOT-011-033 Finish: White

Dimensions: 752mm x 241mm x 340mm

£135.00 Exc. VAT **£162.00 Inc. VAT**

Material: ABS & Stainless Steel

Comfort Shower Stool

Ref: KOT-011-0028 Finish: White

Dimensions: 521mm x 381mm x 651mm

£167.00 Exc. VAT **£200.40 Inc. VAT**

Max Weight Capacity: 204kg

Material: PP & Stainless Steel

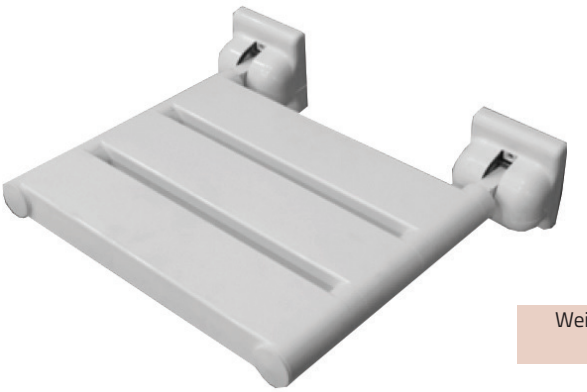

Weight Capacity: 150kg

Comfort Folding Shower Seat

Ref: KOT-011-0003 Finish: White

Dimensions: 330mm x 92mm x 374mm

Including Fixing Bracket: 373mm x 317mm x 91mm

£118.00 Exc. VAT **£141.60 Inc. VAT**

While Stocks Last ***Material: ABS & Stainless Steel***

Bathing

At QX we believe in strong design, great quality and above all, choice. By working in partnership with our designers and manufacturers, we have produced a range of baths to suit every requirement and taste, from contemporary inset to classic freestanding baths, to form the centrepiece of your bathroom.

Our range of 5mm acrylic baths from Genesis & Ascent offers a wide range of sizes and styles to suit any space, built with a fully encapsulated and reinforced base, backed by a 10 year manufacturers guarantee. Many of these baths are available in **Ascent Superspec** option, where the bath is triple coated to increase the thickness to 8mm for added weight, rigidity and durability and include Shower Bath options.

The recent introduction of our Indiana and Oklahoma thin edge baths has proven very popular, so we are pleased to welcome the **NEW** Iowa shower bath to the range. Despite being a standard 1700 x 700 in size, the Iowa incorporates aspects of the thin edge design form the Indiana and Oklahoma to create a shower bath that accepts not only a standard bath panel but also a standard bath screen, whilst still allowing for taps to be fitted along the end. This really is an offering for all applications.

Our whirlpool offering is vast and covers many different systems across the majority of our bath range. From a simple 5 jet system, to multi-purpose systems including whisper jets and chromotherapy, we have a system to suit every requirement. We have even developed systems that are compatible with a number of our freestanding baths.

Our Iconic range of freestanding baths offers the opportunity to indulge. Whether it is a Victorian freestanding bath with metal feet, or a sleek modern design, these baths provide an opportunity for a beautiful feature piece in any bathroom.

NOTE: All Genesis and Ascent Baths are supplied with Bath Leg Sets - Adjustable 86mm - 180mm

Carolina & Ebony

10 YEAR MANUFACTURERS GUARANTEE

GENESIS

• 5mm Acrylic • Supplied without Tap Holes • Available Ascent Superspec where stated

Carolina

GENESIS

Single Ended Bath

Height (Exc. Legs) - 400mm

Dimensions	Capacity	Ref.	Exc. VAT	Inc. VAT
1400 x 700mm	150 Ltr	CARO14/7	£226.00	£271.20
1500 x 700mm	160 Ltr	CARO15/7	£226.00	£271.20
1600 x 700mm	170 Ltr	CARO16/7	£226.00	£271.20
1700 x 700mm	180 Ltr	CARO17/7	£226.00	£271.20
1800 x 800mm	200 Ltr	CARO18/8	£402.00	£482.40

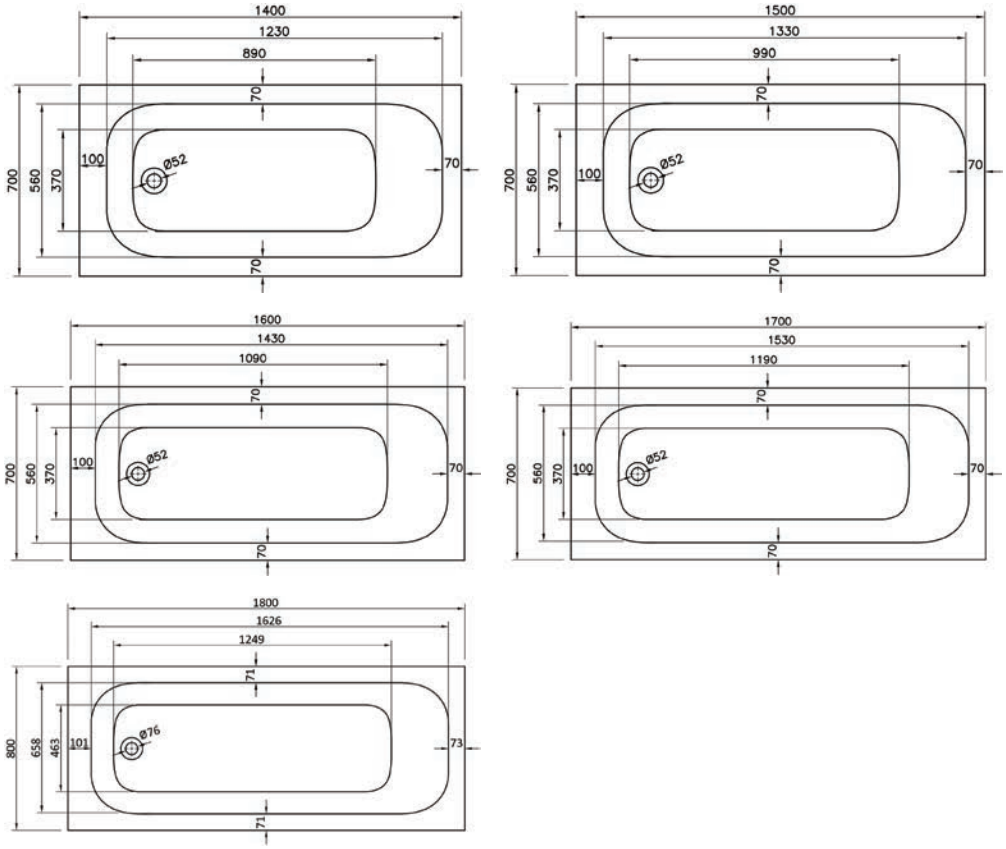

Whirlpool Options Available p132-140

Selection of Bath Panels Available p124

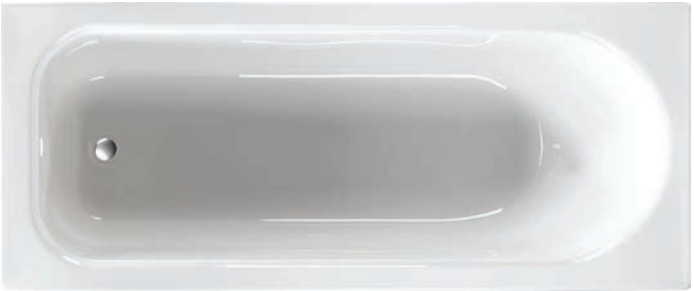

Ebony

Single Ended Bath

Height (Exc. Legs) - 410mm

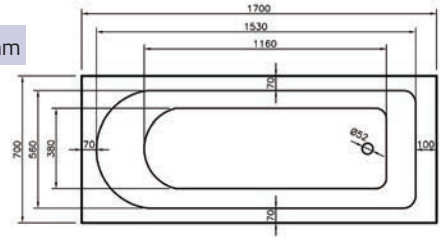

GENESIS

Dimensions	Capacity	Ref.	Exc. VAT	Inc. VAT
1700 x 700mm	170 Ltr	EB17/7	£281.00	£337.20

ascent SUPERSPEC

Dimensions	Capacity	Ref.	Exc. VAT	Inc. VAT
1700 x 700mm	170 Ltr	EB17/7S	£454.00	£544.80

Dakota & Virginia

• 5mm Acrylic • Supplied without Tap Holes • Available Ascent Superspec where stated

10 YEAR MANUFACTURERS GUARANTEE

Dakota

Single Ended Bath

Height (Exc. Legs) - 400mm

Dimensions	Capacity	Ref.	Exc. VAT	Inc. VAT
1200 x 700mm	120 Ltr	DAKO12/7	£226.00	£271.20

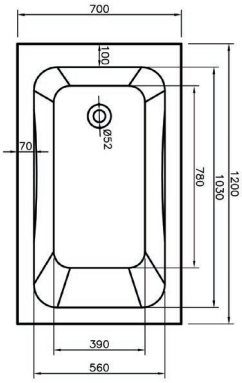

Virginia Twin Gripped

Height (Exc. Legs) - 1700 x 700mm - 355mm
Height (Exc. Legs) - 1700 x 800mm - 400mm
Height (Exc. Legs) - 1800 x 800mm - 400mm

Single Ended Bath

Dimensions	Capacity	Ref.	Exc. VAT	Inc. VAT
1700 x 700mm	190 Ltr	VIR17/7	£310.00	£372.00
1700 x 800mm	205 Ltr	VIR17/8	£374.00	£448.80
1800 x 800mm	230 Ltr	VIR18/8	£474.00	£568.80

Dimensions	Capacity	Ref.	Exc. VAT	Inc. VAT
1500 x 700mm	190 Ltr	VIR15/7S	£404.00	£484.80
1700 x 700mm	190 Ltr	VIR17/7S	£404.00	£484.80

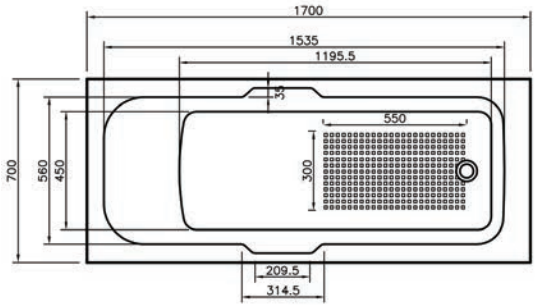

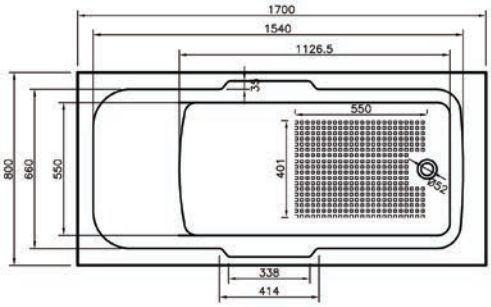

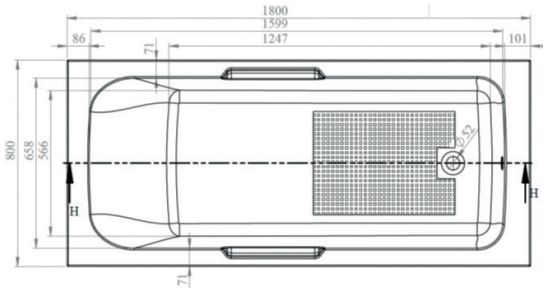

Whirlpool Options Available p132-140

Selection of Bath Panels Available p124

Alaska & Arizona

10 YEAR MANUFACTURERS GUARANTEE

GENESIS

• 5mm Acrylic • Supplied without Tap Holes • Available Ascent Superspec where stated

Alaska

Double Ended Bath

Height (Exc. Legs) - 410mm

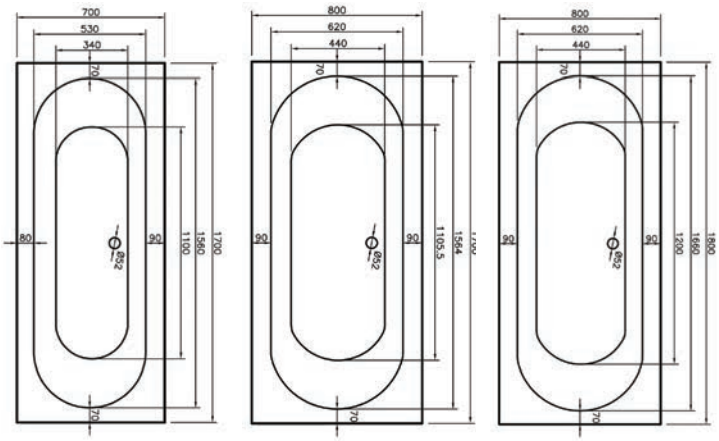

GENESIS

Dimensions	Capacity	Ref.	Exc. VAT	Inc. VAT
1700 x 700mm	185 Ltr	ALSK17/7	£349.00	£418.80
1700 x 800mm	200 Ltr	ALSK17/8	£402.00	£482.40
1800 x 800mm	210 Ltr	ALSK18/8	£402.00	£482.40

ascent SUPERSPEC

Dimensions	Capacity	Ref.	Exc. VAT	Inc. VAT
1700 x 800mm	200 Ltr	ALSK17/8S	£523.00	£627.60

Whirlpool Options Available p132-140

Selection of Bath Panels Available p124

Arizona

Double Ended Bath

Height (Exc. Legs) - 410mm

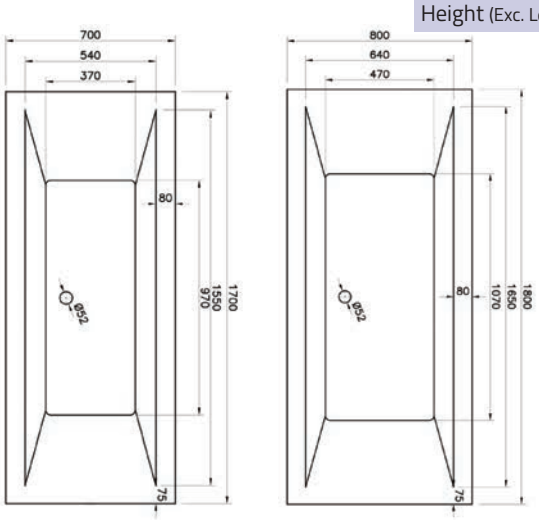

GENESIS

Dimensions	Capacity	Ref.	Exc. VAT	Inc. VAT
1700 x 700mm	185 Ltr	ARIZ17/7	£349.00	£418.80
1800 x 800mm	210 Ltr	ARIZ18/8	£402.00	£482.40

ascent SUPERSPEC

Dimensions	Capacity	Ref.	Exc. VAT	Inc. VAT
1700 x 700mm	185 Ltr	ARIZ17/7S	£454.00	£544.80
1800 x 800mm	210 Ltr	ARIZ18/8S	£523.00	£627.60

Whirlpool Options Available p132-140

Selection of Bath Panels Available p124

Montana & Nevada

• 5mm Acrylic • Supplied without Tap Holes • Available Ascent Superspec where stated

10 YEAR MANUFACTURERS GUARANTEE

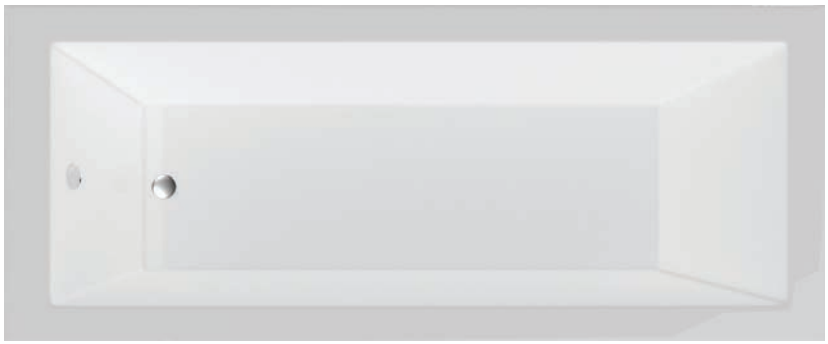

Montana

Single Ended Bath

Height (Exc. Legs) - 420mm

Whirlpool Options Available p132-140

Selection of Bath Panels Available p124

GENESIS

Dimensions	Capacity	Ref.	Exc. VAT	Inc. VAT
1500 x 700mm	170 Ltr	MON15/7	£333.00	£399.60
1600 x 700mm	185 Ltr	MON16/7	£333.00	£399.60
1700 x 700mm	200 Ltr	MON17/7	£349.00	£418.80

ascent SUPERSPEC

Dimensions	Capacity	Ref.	Exc. VAT	Inc. VAT
1500 x 700mm	170 Ltr	MON15/7S	£434.00	£520.80
1600 x 700mm	185 Ltr	MON16/7S	£434.00	£520.80
1700 x 700mm	200 Ltr	MON17/7S	£454.00	£544.80

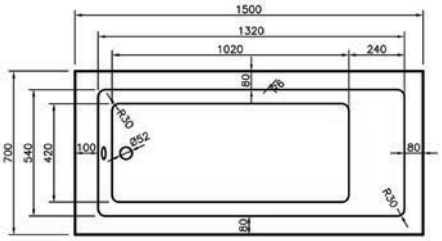

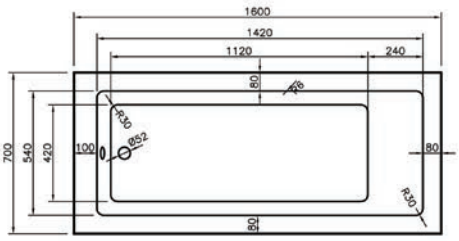

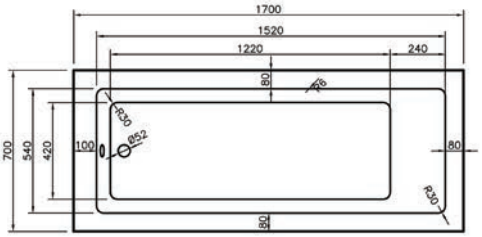

Nevada

Double Ended Bath

Height (Exc. Legs) - 420mm

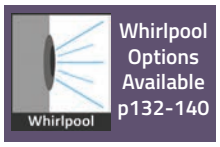

Whirlpool Options Available p132-140

Selection of Bath Panels Available p124

GENESIS

Dimensions	Capacity	Ref.	Exc. VAT	Inc. VAT
1700 x 800mm	225 Ltr	NEV17/8	£402.00	£482.40
1800 x 800mm	235 Ltr	NEV18/8	£402.00	£482.40

ascent SUPERSPEC

Dimensions	Capacity	Ref.	Exc. VAT	Inc. VAT
1700 x 800mm	225 Ltr	NEV17/8S	£523.00	£627.60
1800 x 800mm	235 Ltr	NEV18/8S	£523.00	£627.60

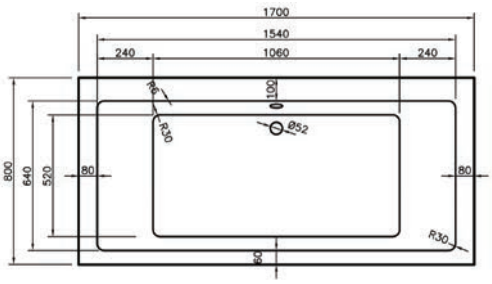

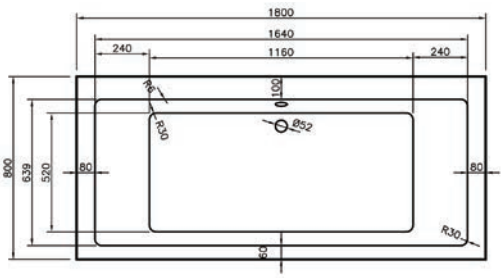

Eden, Indiana & Oklahoma

10 YEAR MANUFACTURERS GUARANTEE

GENESIS

• 5mm Acrylic • Supplied without Tap Holes • Available Ascent Superspec where stated

Eden

Single Ended Bath

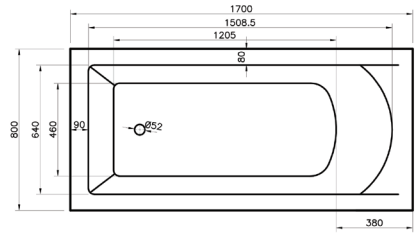

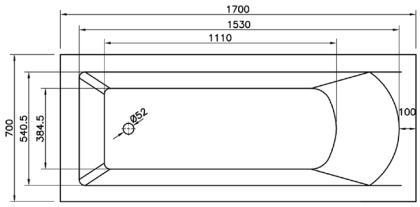

GENESIS

Height (Exc. Legs) - 1700 x 700mm - 410mm
Height (Exc. Legs) - 1700 x 800mm - 440mm

Dimensions	Capacity	Ref.	Exc. VAT	Inc. VAT
1700 x 700mm	190 Ltr	EDE17/7	£349.00	£418.80
1700 x 800mm	210 Ltr	EDE17/8	£402.00	£482.40

Indiana

Thin Edged Bath

Single Ended Bath

Height (Exc. Legs) - 400mm

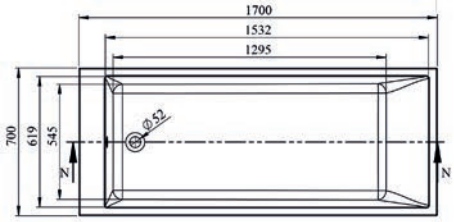

GENESIS

Dimensions	Capacity	Ref.	Exc. VAT	Inc. VAT
1700 x 700mm	-	IND17/7	£347.00	£416.40

ascent SUPERSPEC

Dimensions	Capacity	Ref.	Exc. VAT	Inc. VAT
1700 x 700mm	-	IND17/7S	£451.00	£541.20

Oklahoma

Thin Edged Bath

Single Ended Bath

Height (Exc. Legs) - 400mm

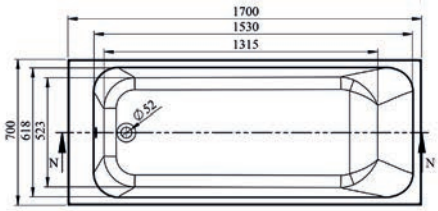

GENESIS

Dimensions	Capacity	Ref.	Exc. VAT	Inc. VAT
1700 x 700mm	-	OKL17/7	£347.00	£416.40

ascent SUPERSPEC

Dimensions	Capacity	Ref.	Exc. VAT	Inc. VAT
1700 x 700mm	-	OKL17/7S	£451.00	£541.20

Deco, Alabama & Nebraska

• Superspec 8mm Acrylic • Supplied without Tap Holes

10 YEAR MANUFACTURERS GUARANTEE

Deco

Single Ended Bath

Height (Exc. Legs) - 400mm

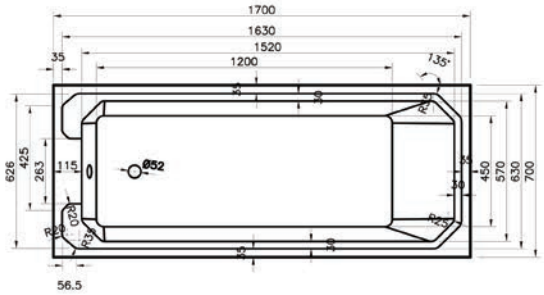

Dimensions	Capacity	Ref.	Exc. VAT	Inc. VAT
1700 x 700mm	185 Ltr	DECO17/7	£454.00	£544.80

Alabama

Single Ended Bath

Height (Exc. Legs) - 420mm

NOTE: Taps are not suitable for installation at the end of the bath

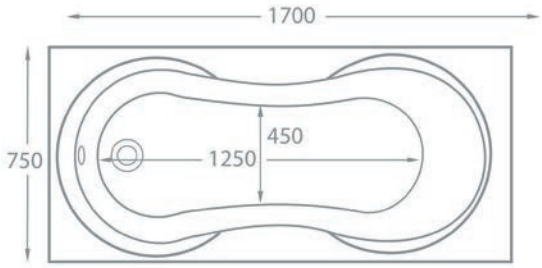

Dimensions	Capacity	Ref.	Exc. VAT	Inc. VAT
1700 x 750mm	210 Ltr	ALB17/7S	£470.00	£564.00

Nebraska

Double Ended Bath

Height (Exc. Legs) - 1700 x 750mm - 410mm
Height (Exc. Legs) - 1800 x 800mm - 440mm

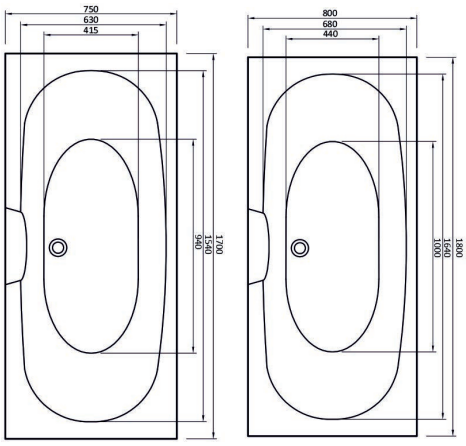

Dimensions	Capacity	Ref.	Exc. VAT	Inc. VAT
1700 x 750mm	225 Ltr	NEB17/75	£470.00	£564.00
1800 x 800mm	235 Ltr	NEB18/8	£523.00	£627.60

Bath Panels

A selection of Wooden and Acrylic Panels in Gloss White and Wood Finishes

Supastyle • 2-3mm Acrylic Panels • Panel Height: 510mm *(No Adjustment)* • 1-Piece Panel

Front Panels	Ref.	Exc. VAT	Inc. VAT
1700mm	S/STY17	£51.00	£61.20
1800mm	S/STY18	£127.00	£152.40

End Panels*	Ref.	Exc. VAT	Inc. VAT
700/750mm	S/STY7	£29.00	£34.80
800mm	S/STY8	£29.00	£34.80

**End Panels are plain and do not have a ridge along the bottom*

Destiny • MDF Wooden Panels • Gloss White Finish • Panel Height: Adjustable 450-540mm • 2-Piece Panel

Front Panels	Ref.	Exc. VAT	Inc. VAT
1500mm	163005	£136.00	£163.20
1600mm	163004	£143.00	£171.60
1700mm	163003	£145.00	£174.00
1800mm	163002	£151.00	£181.20

End Panels	Ref.	Exc. VAT	Inc. VAT
700mm	163011	£72.00	£86.40
750mm	163010	£75.00	£90.00
800mm	163009	£78.00	£93.60

QX Plain • MDF Wooden Panels • Gloss White Finish • Panel Height: Adjustable 450-540mm • 2-Piece Panel

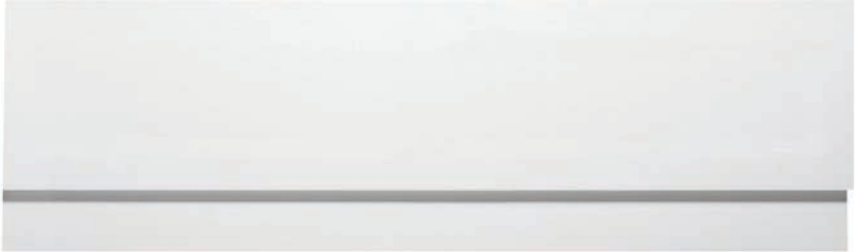

Front Panels	Ref.	Exc. VAT	Inc. VAT
1500mm	163105	£127.00	£152.40
1600mm	163106	£127.00	£152.40
1700mm	163107	£127.00	£152.40
1800mm	163108	£140.00	£168.00
1900mm	163109	£140.00	£168.00

End Panels	Ref.	Exc. VAT	Inc. VAT
700mm	163101	£64.00	£76.80
750mm	163102	£62.00	£74.40
800mm	163103	£72.00	£86.40
900mm	163104	£67.00	£80.40

Q-Line • MDF Wooden Panels • 2 Colour Finishes • Panel Height: Adjustable 400-580mm • 2-Piece Panel

Matt Moonlight Blue

Platinum Grey

Q-Line Panels match the Q-Line Furniture Range on p342-353

		Matt Moonlight Blue		Platinum Grey	
Front Panels	**Ref.**	**Exc. VAT**	**Inc. VAT**	**Exc. VAT**	**Inc. VAT**
1700mm	GQ1700BP	£229.00	£274.00	£229.00	£274.00
End Panels	**Ref.**	**Exc. VAT**	**Inc. VAT**	**Exc. VAT**	**Inc. VAT**
700mm	GQ700BP	£95.00	£114.00	£95.00	£114.00
750mm	GQ750BP	£101.00	£121.20	n/a	n/a
800mm	GQ800BP	£108.00	£129.60	£108.00	£129.60

Kansas & Kansas Offset

• 5mm Acrylic • Supplied without Tap Holes • Available Ascent Superspec where stated

10 YEAR MANUFACTURERS GUARANTEE

Kansas

Double Ended Bath

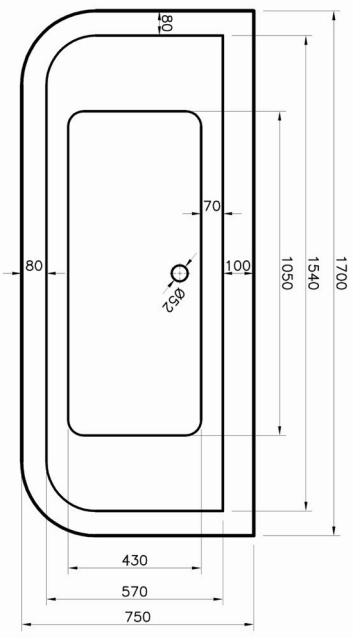

Bath Height (Exc. Legs) - 410mm
Panel Height - 560mm

Dimensions	Capacity	Ref.	Exc. VAT	Inc. VAT
1700 x 750mm	180 Ltr	KN17/75	£360.00	£432.00
Kansas Panel	-	KNPAN	£225.00	£270.00
Bath Total			**£585.00**	**£702.00**

Whirlpool Options Available p132-140

Pictured Left Hand

Kansas Offset

Single Ended Bath

1600 mm Bath Height (Exc. Legs) - 410mm
1700 mm Bath Height (Exc. Legs) - 410mm
Panel Height - 560mm

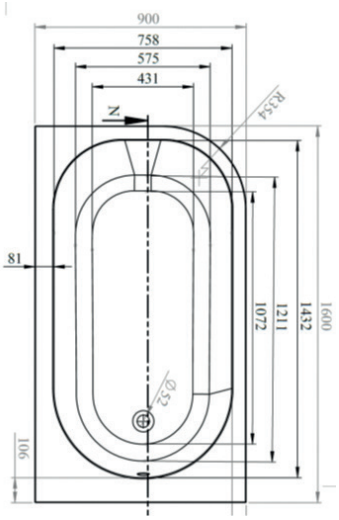

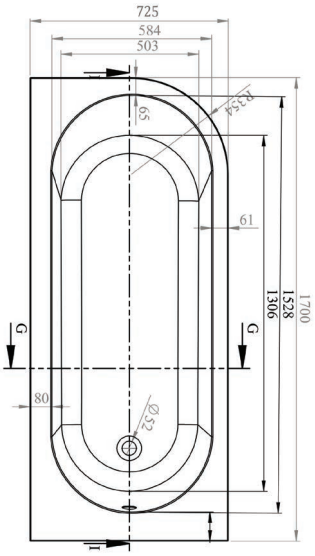

Dimensions	Capacity	Ref.	Exc. VAT	Inc. VAT
1600 x 900mm	210 Ltr	KN16/9	£430.00	£516.00
Kansas 1600 Offset Panel	-	KN16OFFPAN	£226.00	£217.20
Bath Total			**£656.00**	**£787.20**

Dimensions	Capacity	Ref.	Exc. VAT	Inc. VAT
1700 x 725mm	195 Ltr	KN17/725	£360.00	£432.00
Kansas 1700 Offset Panel	-	KN17OFFPAN	£225.00	£270.00
Bath Total			**£585.00**	**£702.00**

Available Left Hand or Right Hand

Whirlpool Options Available p132-140

California Shower Bath

GENESIS

- 5mm Acrylic
- Supplied without Tap Holes
- Available Ascent Superspec where stated
- Available in 1500mm & 1700mm

Pictured Left Hand

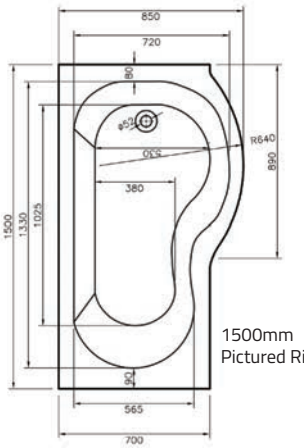

1500mm
Pictured Right Hand

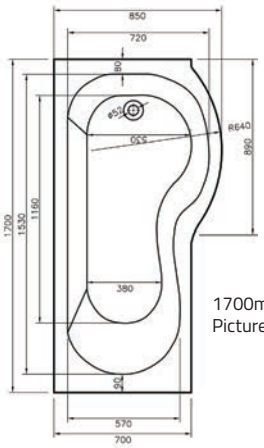

1700mm
Pictured Right Hand

GENESIS

Description	Dimensions	Capacity	Ref.	Exc. VAT	Inc. VAT
California Shower Bath *Available Left or Right Hand*	1500 x 700mm (850mm Max)	180 Ltr	CALI15/7	£356.00	£427.20
California Bath Front Panel	1500mm	-	CALI-15FP	£133.00	£159.60
California Bath End Panel	700mm	-	CALI-7EP	£76.00	£91.20
Discovery Universal Bath Screen (*Excluding Towel Rail)*	1350mm High	-	QXGDS800	£179.00	£214.80
Bath Total			GENESIS STANDARD SPEC	£744.00	**£892.80**

Description	Dimensions	Capacity	Ref.	Exc. VAT	Inc. VAT	Ref.	Exc. VAT	Inc. VAT
California Shower Bath *Available Left or Right Hand*	1700 x 700mm (850mm Max)	200 Ltr	CALI17/7	£356.00	£427.20	CALI17/7S	£482.00	£578.40
California Bath Front Panel	1700mm	-	CALI-17FP	£133.00	£159.60	CALI-17FP	£133.00	£159.60
California Bath End Panel	700mm	-	CALI-7EP	£76.00	£91.20	CALI-7EP	£76.00	£91.20
Discovery Universal Bath Screen (*Excluding Towel Rail)*	1350mm High	-	QXGDS800	£179.00	£214.80	QXGDS800	£179.00	£214.80
Bath Total			GENESIS STANDARD SPEC	£744.00	**£892.80**	ascent SUPERSPEC	£870.00	**£1,044.00**

Vermont Shower Bath

10 YEAR MANUFACTURERS GUARANTEE

- 5mm Acrylic
- Supplied without Tap Holes
- Available Ascent Superspec where stated
- Available in 1500mm & 1700mm
- 2 Bath Screen Options - See p128

Pictured Left Hand

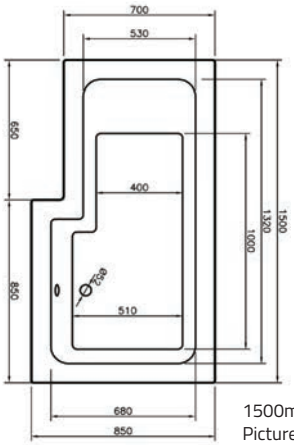

1500mm
Pictured Right Hand

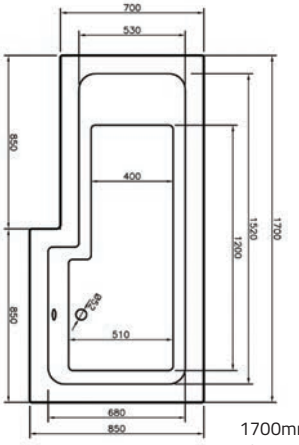

1700mm
Pictured Right Hand

Description	Dimensions	Capacity	Ref.	Exc. VAT	Inc. VAT
Vermont Shower Bath *Available Left or Right Hand*	1500 x 700mm (850mm Max)	160 Ltr	VER15/7	£356.00	£427.20
Vermont Bath Front Panel	1500mm	-	VER-15FP	£133.00	£159.60
Vermont Bath End Panel	700mm	-	CALI-7EP	£76.00	£91.20
Vermont Bath Screen *Reversible - 6mm Glass*	1400mm (H) x 800mm (W)	-	QXGVERBS800	£232.00	£278.40
Bath Total			GENESIS STANDARD SPEC	£797.00	**£956.40**

Description	Dimensions	Capacity	Ref.	Exc. VAT	Inc. VAT	Ref.	Exc. VAT	Inc. VAT
Vermont Shower Bath *Available Left or Right Hand*	1700 x 700mm (850mm Max)	180 Ltr	VER17/7	£356.00	£427.20	VER17/7S	£482.00	£578.40
Vermont Bath Front Panel	1700mm	-	VER-17FP	£133.00	£159.60	VER-17FP	£133.00	£159.60
Vermont Bath End Panel	700mm	-	CALI-7EP	£76.00	£91.20	VER-7EP	£76.00	£91.20
Vermont Bath Screen *Reversible - 6mm Glass*	1400mm (H) x 800mm (W)	-	QXGVERBS800	£232.00	£278.40	QXGVERBS800	£232.00	£278.40
Bath Total			GENESIS STANDARD SPEC	£797.00	**£956.40**	ascent SUPERSPEC	£923.00	**£1,107.60**

Shower Bath Screens & Panels

GENESIS

10 YEAR MANUFACTURERS GUARANTEE

Additional Screen and Bath Panel options for the California & Vermont Shower Baths

California 'P' Shaped Shower Bath

Discovery Universal Shower Bath Screen

California 2-Panel Shower Bath Screen - Open

California 2-Panel Shower Bath Screen - Closed

Screen Options	Dimensions	Handing	Ref.	Exc. VAT	Inc. VAT
Discovery Universal Shower Bath Screen	1350mm (H) x 806 (W)	Reversible	QXGDS800	£179.00	**£214.80**
California 2-Panel Shower Bath Screen	1500mm (H) x 1350mm (W)	Reversible	QXG6CS	£332.00	**£394.80**

Wooden 'P' Shaped Bath Panels above *Pictured in Dark Walnut*

Wooden Bath Panel Options	Height	Handing	Available Finishes*	Ref.	Exc. VAT	Inc. VAT
1500mm 'P' Shaped Front Panel	540mm	LH or RH	Light Walnut, Dark Walnut & Gloss White	RNPAN15	£209.00	**£250.80**
1700mm 'P' Shaped Front Panel	540mm	LH or RH	Dark Walnut & Gloss White	RNPAN17	£209.00	**£250.80**
700mm 'P' Shaped End Panel	540mm	-	Dark Walnut & Gloss White	RNPANEND	£118.00	**£250.80**

Vermont 'L' Shaped Shower Bath

Vermont Shower Bath Screen

Elegancia Shower Bath Screen

Elegancia Screen incudes Towel Bar

Screen Options	Dimensions	Ref.	Exc. VAT	Inc. VAT
Vermont Shower Bath Screen	1400mm (H) x 800mm (W)	QXGVERBS800	£232.00	**£278.40**
Elegancia Shower Bath Screen	1400mm (H) x 800mm (W)	QX119BSPSC	£316.00	**£379.20**

Wooden Bath Panel Options	Height	Handing	Available Finishes*	Ref.	Exc. VAT	Inc. VAT
1500mm 'L' Shaped Front Panel	540mm	Reversible	Light Walnut & Gloss White	SQPAN15	£134.00	**£160.80**
1700mm 'L' Shaped Front Panel	540mm	Reversible	Light Walnut & Gloss White	SQPAN17	£134.00	**£160.80**
700mm 'L' Shaped End Panel	540mm	-	Gloss White	SQPANEND	£64.00	**£76.80**

NEW Iowa Shower Bath

- 5mm Acrylic
- Supplied without Tap Holes
- Can be used with Standard Bath Panels
- Can be used with Standard Bath Screen
- Dedicated Showering Area

10 YEAR MANUFACTURERS GUARANTEE

Dedicated Showering Area

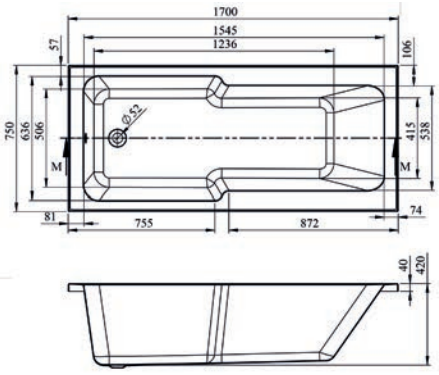

Dimensions	Capacity	Ref.	Exc. VAT	Inc. VAT
1700 x 750mm	-	IOWA17/75	£310.00	£372.00

Combination Pictured Above

Description	Dimensions	Ref.	Exc. VAT	Inc. VAT
Iowa Shower Bath	1700 x 750mm	IOWA17/75	£310.00	£372.00
QX Plain Bath Front Panel	1700mm	163107	£127.00	£152.40
QX Plain Bath End Panel	750mm	163102	£62.00	£74.40
Genesis Deluxe 2-Fold Bath Screen *(Reversible)*	1350mm (H) x 920mm (W)	QX2FLDSQ	£224.00	£268.80
Bath Total		GENESIS STANDARD SPEC	£723.00	**£867.60**

Also Shown With:

Nevada Shower Valve with Riser Rail & Bath Spout	S1032	£406.00	**£487.20**

Bath can be installed with your choice of Standard Bath Panels & Standard Bath Screen options

Missouri & Colorado

• Superspec 8mm Acrylic • Supplied without Tap Holes

Missouri

Dimensions	Capacity	Ref.	Exc. VAT	Inc. VAT
1300 x 1300mm	225 Ltr	MISS1300	£631.00	£757.20
Panel Only	-	MISSPAN	£260.00	£312.00
Bath Total			£891.00	**£1,069.20**

Whirlpool Options Available p132-140

Bath Height (Exc. Legs) - 415mm
Panel Height - 560mm

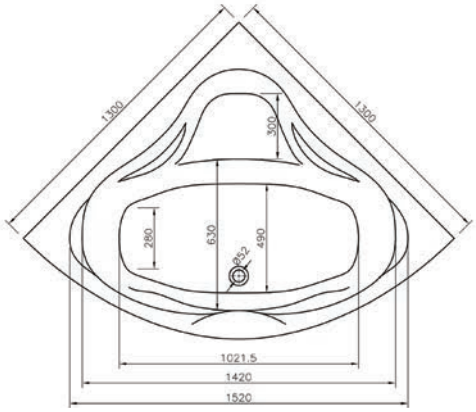

Colorado

Dimensions	Capacity	Ref.	Exc. VAT	Inc. VAT
1400 x 1400mm	240 Ltr	COLO1400	£484.00	£580.80
Panel Only	-	COLO14PN	£186.00	£223.20
Bath Total			£670.00	**£804.00**

Whirlpool Options Available p132-140

Bath Height (Exc. Legs) - 470mm
Panel Height - 560mm

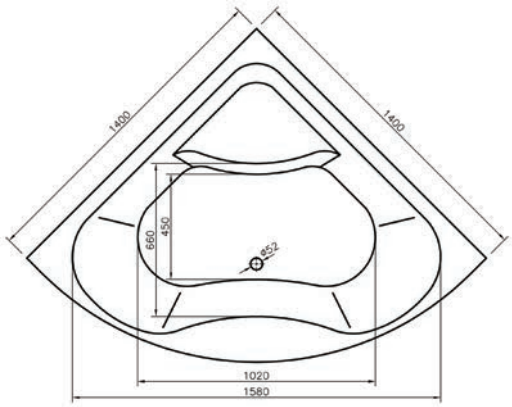

Idaho & Tennessee

• Superspec 8mm Acrylic • Supplied without Tap Holes

Idaho

Bath Height (Exc. Legs) - 420mm
Panel Height - 520mm

Whirlpool Options Available p132-140

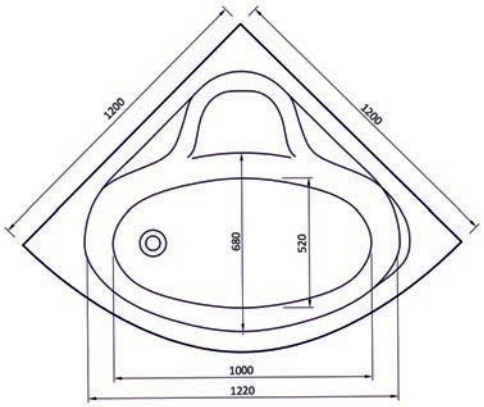

Dimensions	Capacity	Ref.	Exc. VAT	Inc. VAT
1200 x 1200mm	200 Ltr	IDAH1200	£631.00	£757.20
Panel Only	-	IDAHPAN	£260.00	£312.00
Bath Total			£891.00	£1,069.20

Tennessee

Bath Height (Exc. Legs) - 460mm
Panel Height - 590mm

Whirlpool Options Available p132-140

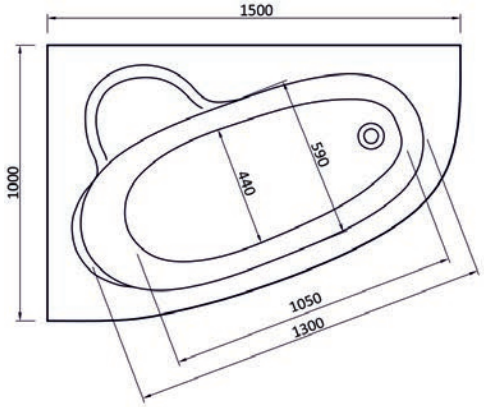

Dimensions	Capacity	Ref.	Exc. VAT	Inc. VAT
1500 x 1000mm	210 Ltr	TEN1500	£535.00	£642.00
Panel Only	-	TEN15PN	£241.00	£289.20
Bath Total			£776.00	£931.20

Bath Pictured Left Hand

Option 1 Whirlpool

Pricing for all Bath Options on p138-140

Option 1 Whirlpool System Includes:

- Pneumatic Triple Control with built in air-flow control, to regulate the intensity of the massage pressure.
- 5 Multi-Directional Mini Side Jets - regulated with air control
- Child Safety Side Suction - System shuts off if suction is covered.
- 3/4hp Pump with fully reinforced metal framework.
- Chrome Pop-Up Waste

Pneumatic On/Off and Flow Control

Mini Side Jet

Child Safety Side Suction

Chrome Pop-Up Waste

Carolina 1700 x 700mm Bath with Option 1 Whirlpool

£1,014.00 Exc. VAT

£1,216.80 Inc. VAT

Option 1+ - Including Single Light & Chromotherapy Lighting

Alaska 1700 x 700mm Bath with Option 1+ Whirlpool
£2,878.00 Exc. VAT **£3,453.60 Inc. VAT**

Optional Extras

Single Light

Chromotherapy Light

	Exc. VAT	Inc. VAT
Add Single Light for	£236.00	**£283.20**
Add Chromotherapy for	£1,529.00	**£1,834.80**
Add Both for	£1,763.00	**£2,115.60**

Option 2 Whirlpool

Pricing for all Bath Options on p138-140

2 YEAR MANUFACTURERS GUARANTEE

Option 2 Whirlpool System Includes:

- Pneumatic Triple Control with built in air-flow control, to regulate the intensity of the massage pressure.
- 5 Multi-Directional Mini Side Jets - regulated with air control
- Child Safety Side Suction - System shuts off if suction is covered.
- 4 High Pressure Multi-Directional Micro Jets - regulated with air control - **When ordering a double ended bath, please specify which end of the bath you would like these jets to be installed.**
- 1hp Pump with fully reinforced metal framework.
- Chrome Pop-Up Waste

Pneumatic On/Off and Flow Control

Mini Side Jet

Micro Back Jet

Child Safety Side Suction

Chrome Pop-Up Waste

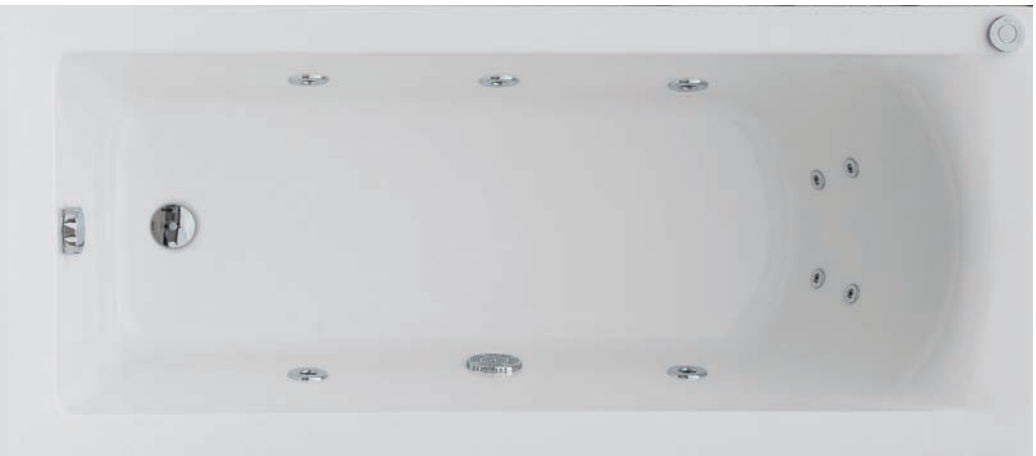

Eden 1700 x 700mm Bath with Option 2 Whirlpool

£1,489.00 Exc. VAT

£1,786.80 Inc. VAT

ADD 4 additional Micro Back/Foot Jets for just:

£150.00 Exc. VAT

£180.00 Inc. VAT

Option 2+ - Including Single Light & Chromotherapy Lighting

Arizona 1700 x 700mm Bath with Option 2+ Whirlpool
£3,229.00 Exc. VAT **£3,874.80 Inc. VAT**

Optional Extras

Single Light

Chromotherapy Light

	Exc. VAT	Inc. VAT
Add Single Light for	£236.00	**£283.20**
Add Chromotherapy for	£1,529.00	**£1,834.80**
Add Both for	£1,763.00	**£2,115.60**

Option 3 Whirlpool

Pricing for all Bath Options on p138-140

Option 3 Whirlpool System Includes:

- Fully Electronic Control
- 4 Multi-Directional Mini Side Jets
- 2 High Pressure Multi-Directional Micro Back Jets
- 2 Massaging Multi-Directional Foot Jets
- 6 Water Jets at the base of the Bath
- Diverter Valve for the luxury of choice to control the flow between Base Jets, Side Jets or a combination of both.
- Chromotherapy Blue Spa Light
- Child Safety Side Suction - System shuts off if suction is covered.
- 1hp Pump with fully reinforced metal framework.
- Chrome Pop-Up Waste

Electronic Controller

Mini Side Jet

Water Spa Jet

Foot Jet

Micro Back Jet

Water Pressure Diverter

Blue Spa Light

Child Safety Side Suction

Chrome Pop-Up Waste

Nebraska 1800 x 800mm Bath with Option 3 Whirlpool

£3,240.00 Exc. VAT

£3,888.00 Inc. VAT

Option 3+ - Adding Chromotherapy Lighting

Optional Extras

Chromotherapy Control Button

Chromotherapy Light

	Exc. VAT	Inc. VAT
Add Chromotherapy for	£857.00	**£1,028.40**
Exofill Waste	£103.00	**£123.60**

Option 4 Whisper Airspa

Pricing for all Bath Options on p138-140

2 YEAR MANUFACTURERS GUARANTEE

Option 4 Airspa System:

The Option 4 is designed with subtlety in mind. The Whisper Jets and Whisper Blower provide a quiet, relaxing bathing experience, while the optional Chromotherapy Lighting adds a touch of class and sophistication.

- Electronic Double Control Button
- 19 Whisper Air Jets in the base of the Base
- Whisper Air Blower
- Chrome Pop-Up Waste (Freestanding Baths Include Click-Clack Waste)

Additional Feature - Chromotherapy Lighting

Add single colour lighting or alternating colour function to your Whisper System for an extra:

£821.00 Exc. VAT £985.20 Inc. VAT

Electronic Controller

Whisper Air Jet

Chromotherapy Lighting Option
(additional charge applies)

Oregon 1850 x 850mm Bath with Option 4 Whisper System Only

£4,369.00 Exc. VAT

£5,242.80 Inc. VAT

Oregon 1850 x 850mm Bath with Option 4 Whisper System PLUS Chromotherapy Lighting

£5,190.00 Exc. VAT

£6,228.00 Inc. VAT

Option 5 Whirlpool

Pricing for all Bath Options on p138-140

Option 5 Whirlpool System Includes:

- Fully Electronic Control
- 6 Water Back Jets
- 6 Water Foot Jets
- 6 Water Jets in the base of the Base
- Diverter Valve for the luxury of choice to control the flow between Base Jets, Back Jets, Foot Jets or a combination of all.
- Single Spa Light
- Child Safety Side Suction - System shuts off if suction is covered.
- 1hp Pump with fully reinforced metal framework.
- Chrome Pop-Up Waste

Electronic Controller

Water Spa Jet

Water Pressure Diverter

Single Spa Light

Nevada 1700 x 800mm Bath with Option 5 Whisper System

£3,536.00 Exc. VAT

£4,243.20 Inc. VAT

Option 6 Whirlpool

Pricing for all Bath Options on p138-140

2 YEAR MANUFACTURERS GUARANTEE

Option 6 Whirlpool System Includes:

- Fully Electronic Control
- 12 Water Back Jets
- 4 Water Side Jets
- 16 Water Jets in the base of the Base
- 12 Chromotherapy Lights
- Child Safety Side Suction - System shuts off if suction is covered.
- 1hp Pump with fully reinforced metal framework.
- Chrome Pop-Up Waste - If bath does not have pre-fitted waste

Electronic Controller

Back Jet

Side Jet

Water Spa Jet

Chromotherapy Lighting

Child Safety Side Suction

Grosvenor Freestanding 1700 x 750mm Bath* with Option 6 System

£5,999.00 Exc. VAT

£7,198.80 Inc. VAT

*Grosvenor Freestanding Bath now available 1550 x 750mm

Alaska 1800 x 800mm Bath with Option 6 System

£4,272.00 Exc. VAT

£5,126.40 Inc. VAT

Whirlpool Bath Prices

2 YEAR MANUFACTURERS GUARANTEE

Qx Whirlpools

First Choose Your Bath then Select Your System

Carolina
Standard Spec

Ebony
Standard Spec

Virginia Twin Gripped
Standard Spec

Alaska
Standard Spec

Arizona
Standard Spec

Montana
Standard Spec

Nevada
Standard Spec

	Option 1 System		Option 2 System		Option 3 System		Option 4 System		Option 5 System		Option 6 System	
Carolina Size (mm)	Exc. VAT	Inc. VAT	Exc. VAT	Inc. VAT	Exc. VAT	Inc. VAT	Exc. VAT	Inc. VAT	Exc. VAT	Inc. VAT	Exc. VAT	Inc. VAT
1400 x 700	£1,014.00	£1,216.80	£1,329.00	£1,594.80	£2,929.00	£3,514.80	£2,450.00	£2,940.00	£3,360.00	£4,032.00	£4,264.00	£5,116.80
1500 x 700	£1,014.00	£1,216.80	£1,345.00	£1,614.00	£2,949.00	£3,538.80	£2,450.00	£2,940.00	£3,360.00	£4,032.00	£4,264.00	£5,116.80
1600 x 700	£1,014.00	£1,216.80	£1,345.00	£1,614.00	£2,949.00	£3,538.80	£2,450.00	£2,940.00	£3,360.00	£4,032.00	£4,264.00	£5,116.80
1700 x 700	£1,014.00	£1,216.80	£1,345.00	£1,614.00	£2,949.00	£3,538.80	£2,450.00	£2,940.00	£3,360.00	£4,032.00	£4,264.00	£5,116.80
1800 x 800	£1,190.00	£1,428.00	£1,541.00	£1,849.20	£3,118.00	£3,741.60	£2,626.00	£3,151.20	£3,536.00	£4,243.20	£4,439.00	£5,326.80
Ebony Size (mm)	Exc. VAT	Inc. VAT	Exc. VAT	Inc. VAT	Exc. VAT	Inc. VAT	Exc. VAT	Inc. VAT	Exc. VAT	Inc. VAT	Exc. VAT	Inc. VAT
1700 x 700	£972.00	£1,166.40	£1,390.00	£1,668.00	£2,946.00	£3,535.20	£2,505.00	£3,006.00	£3,415.00	£4,098.00	£4,319.00	£5,182.80
Virginia Size (mm)	Exc. VAT	Inc. VAT	Exc. VAT	Inc. VAT	Exc. VAT	Inc. VAT	Exc. VAT	Inc. VAT	Exc. VAT	Inc. VAT	Exc. VAT	Inc. VAT
1700 x 700	£1,098.00	£1,317.60	£1,428.00	£1,713.60	-	-	-	-	-	-	-	-
1700 x 800	£1,163.00	£1,395.60	£1,493.00	£1,791.60	-	-	-	-	-	-	-	-
Alaska Size (mm)	Exc. VAT	Inc. VAT	Exc. VAT	Inc. VAT	Exc. VAT	Inc. VAT	Exc. VAT	Inc. VAT	Exc. VAT	Inc. VAT	Exc. VAT	Inc. VAT
1700 x 700	£1,137.00	£1,364.40	£1,489.00	£1,786.80	£3,015.00	£3,618.00	£2,573.00	£3,087.60	£3,483.00	£4,179.60	£4,219.00	£5,062.80
1700 x 800	£1,190.00	£1,428.00	£1,541.00	£1,849.20	£3,068.00	£3,681.60	£2,626.00	£3,151.20	£3,536.00	£4,243.20	£4,272.00	£5,126.40
1800 x 800	£1,190.00	£1,428.00	£1,541.00	£1,849.20	£3,118.00	£3,741.60	£2,626.00	£3,151.20	£3,536.00	£4,243.20	£4,272.00	£5,126.40
Arizona Size (mm)	Exc. VAT	Inc. VAT	Exc. VAT	Inc. VAT	Exc. VAT	Inc. VAT	Exc. VAT	Inc. VAT	Exc. VAT	Inc. VAT	Exc. VAT	Inc. VAT
1700 x 700	£1,137.00	£1,364.40	£1,489.00	£1,786.80	£3,015.00	£3,618.00	£2,573.00	£3,087.60	£3,483.00	£4,179.60	£4,219.00	£5,062.80
1800 x 800	£1,190.00	£1,428.00	£1,581.00	£1,897.20	£3,118.00	£3,741.60	£2,626.00	£3,151.20	£3,536.00	£4,243.20	£4,272.00	£5,126.40
Montana Size (mm)	Exc. VAT	Inc. VAT	Exc. VAT	Inc. VAT	Exc. VAT	Inc. VAT	Exc. VAT	Inc. VAT	Exc. VAT	Inc. VAT	Exc. VAT	Inc. VAT
1500 x 700	£1,121.00	£1,345.20	£1,452.00	£1,742.40	£3,056.00	£3,667.20	£2,557.00	£3,068.40	£3,467.00	£4,160.40	£4,371.00	£5,245.20
1600 x 700	£1,121.00	£1,345.20	£1,452.00	£1,742.40	£3,056.00	£3,667.20	£2,557.00	£3,068.40	£3,467.00	£4,160.40	£4,371.00	£5,245.20
1700 x 700	£1,137.00	£1,364.40	£1,468.00	£1,761.60	£3,072.00	£3,686.40	£2,573.00	£3,087.60	£3,483.00	£4,179.60	£4,387.00	£5,264.40
Nevada Size (mm)	Exc. VAT	Inc. VAT	Exc. VAT	Inc. VAT	Exc. VAT	Inc. VAT	Exc. VAT	Inc. VAT	Exc. VAT	Inc. VAT	Exc. VAT	Inc. VAT
1700 x 800	£1,190.00	£1,428.00	£1,520.00	£1,824.00	£3,125.00	£3,750.00	£2626.00	£3,151.20	£3,536.00	£4,243.20	£4,272.00	£5,126.40
1800 x 800	£1,190.00	£1,428.00	£1,541.00	£1,849.20	£3,125.00	£3,750.00	£2626.00	£3,151.20	£3,536.00	£4,243.20	£4,272.00	£5,126.40

Whirlpool Bath Prices

First Choose Your Bath then Select Your System

2 YEAR MANUFACTURERS GUARANTEE

Eden
Standard Spec

Nebraska
Superspec

Kansas
Standard Spec
Inc. Panel

Kansas Offset
Left or Right Hand
Standard Spec
Inc. Panel
Pictured Left Hand

Alabama
Superspec

California
Standard Spec
Inc. Panel & Screen

Vermont
Standard Spec
Inc. Panel & Screen

	Option 1 System		Option 2 System		Option 3 System		Option 4 System		Option 5 System		Option 6 System	
Eden												
Size (mm)	Exc. VAT	Inc. VAT	Exc. VAT	Inc. VAT	Exc. VAT	Inc. VAT	Exc. VAT	Inc. VAT	Exc. VAT	Inc. VAT	Exc. VAT	Inc. VAT
1700 x 700	£1,137.00	£1,364.40	£1,489.00	£1,786.80	£3,015.00	£3,618.00	£2,573.00	£3,087.60	£3,483.00	£4,179.60	£4,387.00	£5,264.40
1700 x 800	£1,190.00	£1,428.00	£1,541.00	£1,849.20	£3,068.00	£3,681.60	£2,626.00	£3,151.20	£3,536.00	£4,243.20	£4,439.00	£5,326.80
Nebraska												
Size (mm)	Exc. VAT	Inc. VAT	Exc. VAT	Inc. VAT	Exc. VAT	Inc. VAT	Exc. VAT	Inc. VAT	Exc. VAT	Inc. VAT	Exc. VAT	Inc. VAT
1700 x 750	£1,259.00	£1,510.80	£1,610.00	£1,932.00	£3,137.00	£3,764.40	£2,695.00	£3,234.00	£3,604.00	£4,324.80	£4,341.00	£5,209.20
1800 x 800	£1,312.00	£1,574.40	£1,703.00	£2,043.60	£3,240.00	£3,888.00	£2,747.00	£3,296.40	£3,657.00	£4,388.40	£4,393.00	£5,271.60
Kansas Inc. Panel												
Size (mm)	Exc. VAT	Inc. VAT	Exc. VAT	Inc. VAT	Exc. VAT	Inc. VAT	Exc. VAT	Inc. VAT	Exc. VAT	Inc. VAT	Exc. VAT	Inc. VAT
1700 x 750	£1,374.00	£1,648.80	£1,725.00	£2,070.00	£3,302.00	£3,962.40	£2,810.00	£3,372.00	£3,719.00	£4,462.80	£4,456.00	£5,347.20
Kansas Offset* Inc. Panel												
Size (mm)	Exc. VAT	Inc. VAT	Exc. VAT	Inc. VAT	Exc. VAT	Inc. VAT	Exc. VAT	Inc. VAT	Exc. VAT	Inc. VAT	Exc. VAT	Inc. VAT
1700 x 725	£1,374.00	£1,648.80	£1,725.00	£2,070.00	£3,302.00	£3,962.40	£2,810.00	£3,372.00	£3,719.00	£4,462.80	£4,456.00	£5,347.20
Alabama												
Size (mm)	Exc. VAT	Inc. VAT	Exc. VAT	Inc. VAT	Exc. VAT	Inc. VAT	Exc. VAT	Inc. VAT	Exc. VAT	Inc. VAT	Exc. VAT	Inc. VAT
1700 x 750	£1,259.00	£1,510.80	£1,610.00	£1,932.00	£3,137.00	£3,764.40	£2,695.00	£3,234.00	£3,604.00	£4,324.80	£4,508.00	£5,409.60
California Inc. Panel & Screen												
Size (mm)	Exc. VAT	Inc. VAT	Exc. VAT	Inc. VAT	Exc. VAT	Inc. VAT	Exc. VAT	Inc. VAT	Exc. VAT	Inc. VAT	Exc. VAT	Inc. VAT
1700 x 700 (850mm Max)	£1,359.00	£1,630.80	£1,711.00	£2,053.20	£3,385.00	£4,062.00	£2,892.00	£3,470.40	£3,802.00	£4,562.40	£4,538.00	£5,445.60
Vermont Inc. Panel & Screen												
Size (mm)	Exc. VAT	Inc. VAT	Exc. VAT	Inc. VAT	Exc. VAT	Inc. VAT	Exc. VAT	Inc. VAT	Exc. VAT	Inc. VAT	Exc. VAT	Inc. VAT
1700 x 700 (850mm Max)	£1,412.00	£1,694.40	£1,764.00	£2,116.80	£3,438.00	£4,125.60	£2,945.00	£3,534.00	£3,855.00	£4,626.00	£4,831.00	£5,797.20

Whirlpool Bath Prices

2 YEAR MANUFACTURERS GUARANTEE

Qx Whirlpools

First Choose Your Bath then Select Your System

Idaho
Superspec
Inc. Panel

Missouri
Superpsec
Inc. Panel

Colorado
Standard Spec
Inc. Panel

Tennessee
Left or Right Hand
Superpsec
Inc. Panel *Pictured Left Hand*

	Option 1 System		Option 2 System		Option 3 System		Option 4 System		Option 5 System		Option 6 System	
Idaho* Inc. Panel Size (mm)	Exc. VAT	Inc. VAT	Exc. VAT	Inc. VAT	Exc. VAT	Inc. VAT	Exc. VAT	Inc. VAT	Exc. VAT	Inc. VAT	Exc. VAT	Inc. VAT
1200 x 1200	£1,679.00	£2,014.80	£1,994.00	£2,392.80	£3,594.00	£4,312.80	£3,115.00	£3,738.00	£4,025.00	£4,830.00	£4,929.00	£5,914.80
Missouri* Inc. Panel Size (mm)	Exc. VAT	Inc. VAT	Exc. VAT	Inc. VAT	Exc. VAT	Inc. VAT	Exc. VAT	Inc. VAT	Exc. VAT	Inc. VAT	Exc. VAT	Inc. VAT
1300 x 1300	£1,791.00	£2,149.20	£2,190.00	£2,628.00	£3,765.00	£4,518.00	£3,115.00	£3,738.00	£4,025.00	£4,830.00	£4,874.00	£5,848.80
Colorado* Inc. Panel Size (mm)	Exc. VAT	Inc. VAT	Exc. VAT	Inc. VAT	Exc. VAT	Inc. VAT	Exc. VAT	Inc. VAT	Exc. VAT	Inc. VAT	Exc. VAT	Inc. VAT
1400 x 1400	£1,570.00	£1,884.00	£1,969.00	£2,362.80	£3,544.00	£4,252.80	£2,894.00	£3,472.80	£3,804.00	£4,564.80	£4,708.00	£5,649.60
Tennessee* Inc. Panel Size (mm)	Exc. VAT	Inc. VAT	Exc. VAT	Inc. VAT	Exc. VAT	Inc. VAT	Exc. VAT	Inc. VAT	Exc. VAT	Inc. VAT	Exc. VAT	Inc. VAT
1500 x 1000	£1,564.00	£1,876.80	£1,879.00	£2,254.80	£3,479.00	£4,174.80	£3,000.00	£3,600.00	£3,910.00	£4,692.00	£4,813.00	£5,775.60

Oregon Freestanding Bath
1850 x 850mm

Option 4 System	
Exc. VAT	Inc. VAT
£4,369.00	£5,242.80

Grosvenor Freestanding Bath
1700 x 750mm

Option 6 System	
Exc. VAT	Inc. VAT
£5,999.00	£7,198.80

*NOTE: When ordering Offset or Corner Baths - Bath Handing, Light and Jet Configurations need to be confirmed upon ordering

Copenhagen & Helsinki

1700 x 800mm • 1800 x 790mm

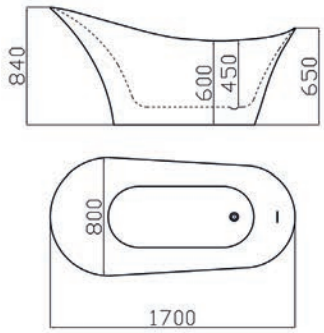

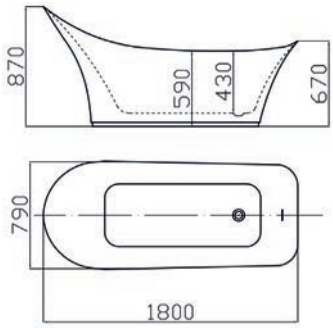

Description	Dimensions L x W x H (mm)	Ref.	Capacity	Exc. VAT	Inc. VAT
Copenhagen Freestanding Bath	1700 x 800 x 840mm	PB280	180 Ltr	£2,267.00	**£2,720.40**
Includes Pre-Fitted Click-Clack Waste					
Helsinki Freestanding Bath	1800 x 790 x 870mm	PB282	190 Ltr	£2,292.00	**£2,750.40**
Helsinki Freestanding Bath with Airspa	1800 x 790 x 870mm	AB282/B3	190 Ltr	£3,100.00	**£3,720.00**
Includes Pre-Fitted Click-Clack Waste					

Oslo & Lisbon

1830 x 850mm • 1700 x 800mm

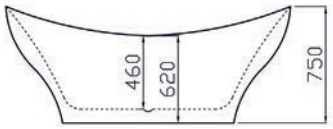

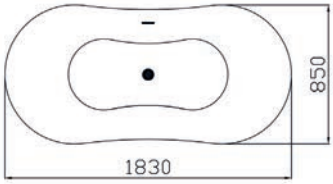

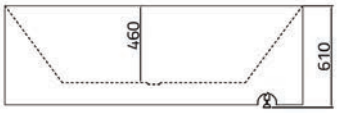

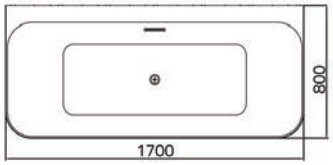

Description	Dimensions L x W x H (mm)	Ref.	Capacity	Exc. VAT	Inc. VAT
Oslo Freestanding Bath	1830 x 850 x 750mm	PB277	210 Ltr	£2,241.00	**£2,689.20**
Includes Pre-Fitted Click-Clack Waste					
Lisbon Freestanding Bath	1700 x 800 x 610mm	PB289	190 Ltr	£1,738.00	**£2,085.60**
Lisbon Freestanding Bath with Airspa	1700 x 800 x 610mm	AB289/B3	190 Ltr	£2,600.00	**£3,120.00**
Includes Pre-Fitted Click-Clack Waste					

Milan & Seville

1700 x 800mm • 1800 x 800mm

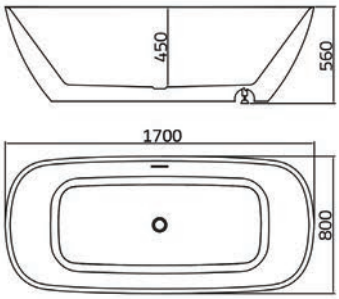

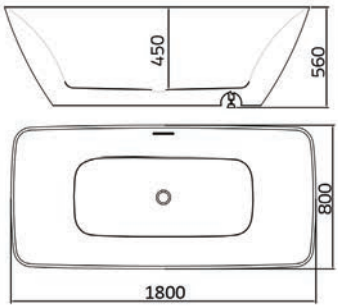

Description	Dimensions L x W x H (mm)	Ref.	Capacity	Exc. VAT	Inc. VAT
Milan Freestanding Bath	1700 x 800 x 560mm	PB290	250 Ltr	£1,739.00	**£2,086.80**
Includes Pre-Fitted Click-Clack Waste					
Seville Freestanding Bath - White*	1800 x 800 x 560mm	PB288	280 Ltr	£1,759.00	**£2,110.80**
Seville Freestanding Bath - White with Airspa	1800 x 800 x 560mm	AB288/B3	280 Ltr	£3,100.00	**£3,720.00**
Seville Freestanding Bath - Black	1800 x 800 x 560mm	PB288-C	280 Ltr	£2,282.00	**£2,738.40**
Seville Freestanding Bath - Black with Airspa	1800 x 800 x 560mm	AB288-C/B3	280 Ltr	£3,100.00	**£3,720.00**

Includes Pre-Fitted Click-Clack Waste

Airspa System

Available on the Lisbon, Helsinki & Seville Baths

Grande Home Airspa System

All airspa systems are equipped with needle air holes around the base of the bath, giving a soft massage effect.

This elegant system is operated via a subtle back-lit touch button control panel, located on the interior of the bath *(excluding Seville - see below)*.

The control panel also operates the chromotherapy lighting, which alternates through 6 different colour options.

In addition to the touch panel control, this system also allows for operation through an App, which can be easily downloaded onto any IOS or Android device *(excluding Seville)*.

SUPER-CLEAN™

Grande Home airspa baths are equipped with a unique SUPER-CLEAN™ disinfection function.

By simply pressing the Manual Super Clean button, the system will flush the air chamber with clean water for 3 minutes, and will dry off the air chamber by blowing air for 3 minutes after the bath is drained.

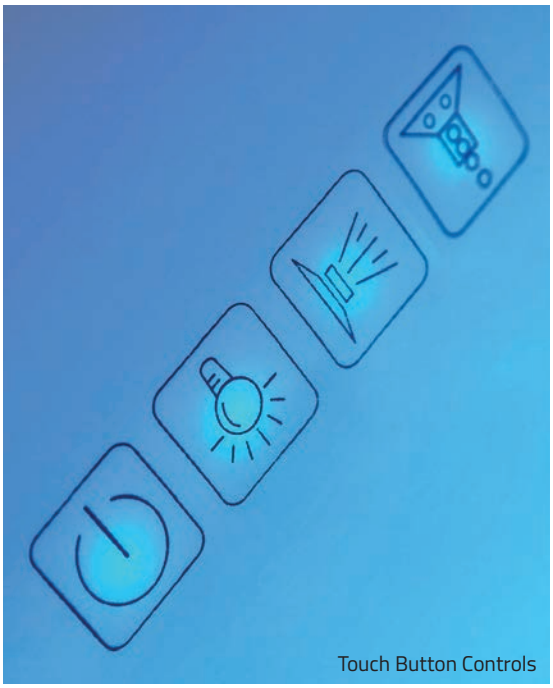

Touch Button Controls

Power On/Off

Chromotherapy Lighting

Air Jets

Manual Super Clean

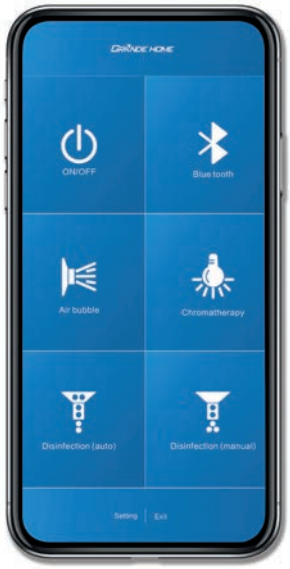

App for Airspa Systems with Touch-Button Controls

Chrome Push-Button System

Seville Bath Only

The Seville Airspa Bath options is now supplied with Chrome Push-Buttons as standard.

Not compatible for App operation.

Sofia

1800 x 1200mm

10 YEAR MANUFACTURERS GUARANTEE

Bath Pictured Left Hand with Whirlpool System

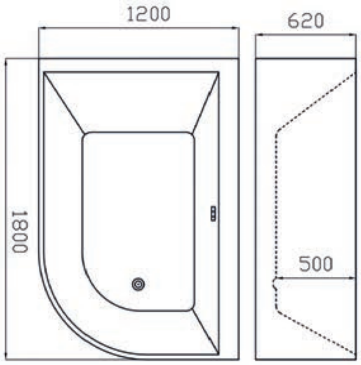

Description	Dimensions L x W x H (mm)	Ref.	Capacity	Exc. VAT	Inc. VAT
Sofia 1800 Freestanding Bath - LH or RH	1800 x 1200 x 620mm	PB261L/R	410 Ltr	£2,059.00	**£2,470.80**
Sofia 1800 Freestanding Bath with Whirlpool - LH only	1800 x 1200 x 620mm	WB261/B6S	410 Ltr	£4,457.00	**£5,348.40**

Includes Pre-Fitted Click-Clack Waste ***Bath is Handed - Please specify Left Hand or Right Hand when ordering***

Grande Home Whirlpool System - Available on the Sofia Bath Only

Bath	Jets	Operation	Extra Features
Sofia 1800 x 1200mm	7 Turbo 22 Small	Touch Button Control Panel	SUPER-HYGIENIC™ Disinfection System

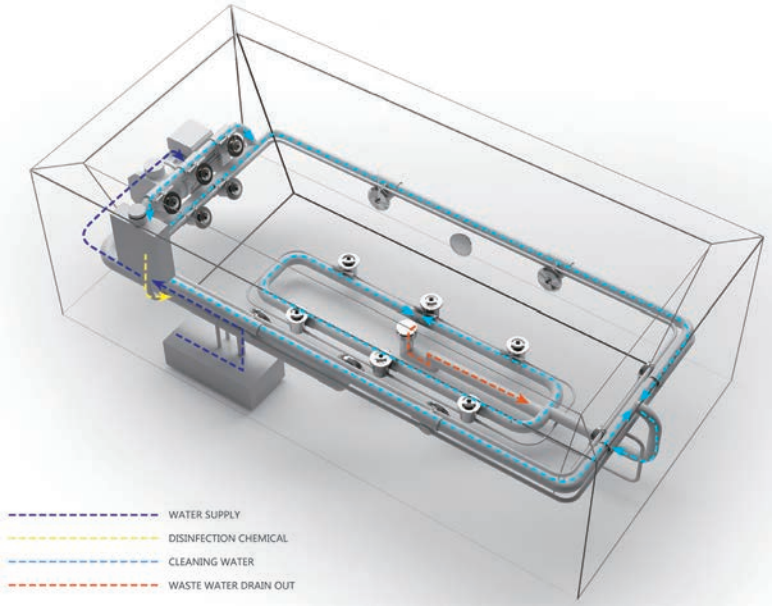

SUPER-HYGIENIC™

Selected GrandeHome whirlpool baths are equipped with SUPER-HYGIENIC™ disinfection system.

This innovative system operates by automatically closing most of the jets to seal up the piping system. The system will then pump a disinfectant solution around the pipes, from a pre-installed tank.

Note: Disinfectant solution is not included - manufacturers recommend using a non-corrosive disinfectant solution suitable for whirlpools.

Porto & Vienna

1800 x 800mm • 1720 x 800mm

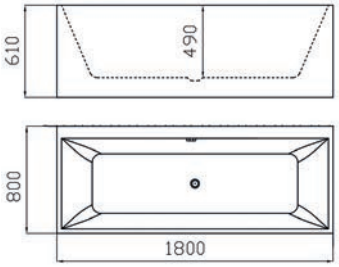

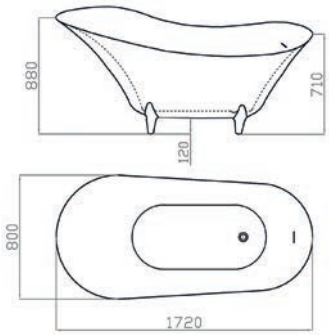

Description	Dimensions L x W x H (mm)	Ref.	Capacity	Exc. VAT	Inc. VAT
Porto Freestanding Bath	1800 x 800 x 600mm	PB266	270 Ltr	£1,999.00	**£2,398.80**
Includes Pre-Fitted Click-Clack Waste					
Vienna Freestanding Bath with White Feet	1720 x 800 x 840	PB284	180 Ltr	£2,765.00	**£3,318.00**
Includes Pre-Fitted Click-Clack Waste					

ICONIC BATHS

Icon & Estoril

1750 x 830mm • 1700 x 700mm

10 YEAR MANUFACTURERS GUARANTEE

Top edge thickness of 15mm consisting of acrylic with resin and fibreglass reinforcement

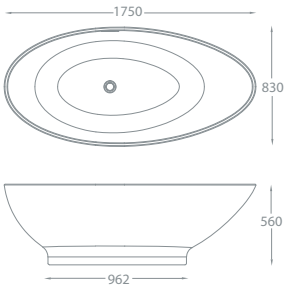

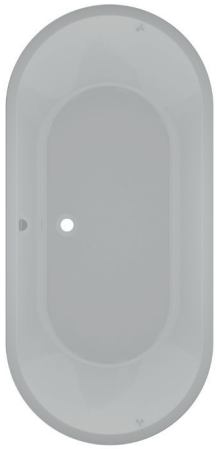

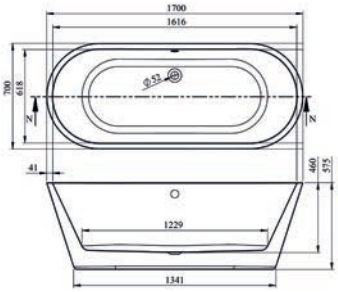

Description	Dimensions L x W x H (mm)	Ref.	Weight	Capacity	Exc. VAT	Inc. VAT
Icon Freestanding Bath	1750 x 830 x 560	QX-ICO1750	47kg	275 Ltr	£1,836.00	£2,203.20
Includes Pre-Fitted Click-Clack Waste						
Estoril Freestanding Bath	1700 x 700 x 575	EST-17/7	45kg	250 Ltr	£1,475.00	**£1,770.00**
Includes Pre-Fitted Click-Clack Waste						

Evora & Aveiro Baths

1700 x 750mm • 1600 x 750mm

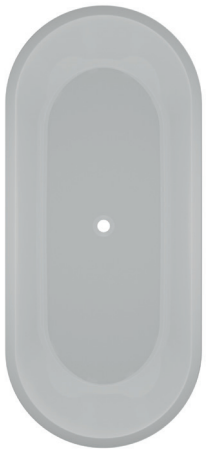

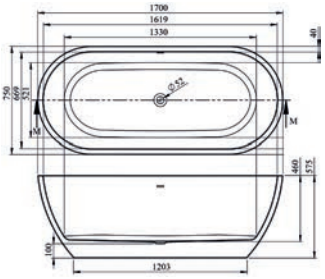

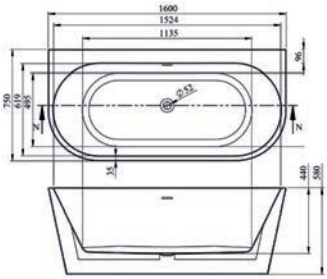

Description	Dimensions L x W x H (mm)	Ref.	Weight	Capacity	Exc. VAT	Inc. VAT
Evora Freestanding Bath	1700 x 750 x 575	EVO-17/75	-	290 Ltr	£1,628.00	**£1,953.60**
Includes Pre-Fitted Click-Clack Waste						
Aveiro Freestanding Bath	1600 x 750 x 580	AVI-16/75	55kg	160 Ltr	£1,628.00	**£1,953.60**
Includes Pre-Fitted Click-Clack Waste						

Ritz & Metropolitan Baths

1700 x 750mm • 1700 x 750mm

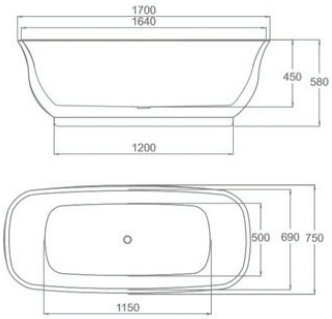

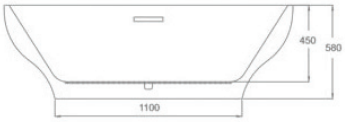

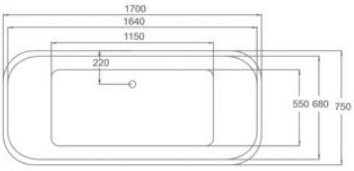

Description	Dimensions L x W x H (mm)	Ref.	Weight	Capacity	Exc. VAT	Inc. VAT
Ritz Freestanding Bath	1700 x 750 x 580	ICN-912	51kg	251 Ltr	£1,575.00	£1,890.00
Includes Pre-Fitted Click-Clack Waste						
Metropolitan Freestanding Bath	1700 x 750 x 580	ICN-1038	50kg	270 Ltr	£1,585.00	**£1,902.00**
Includes Pre-Fitted Click-Clack Waste						

Roma & Valentina Baths

1650 x 700mm • 1700 x 750mm

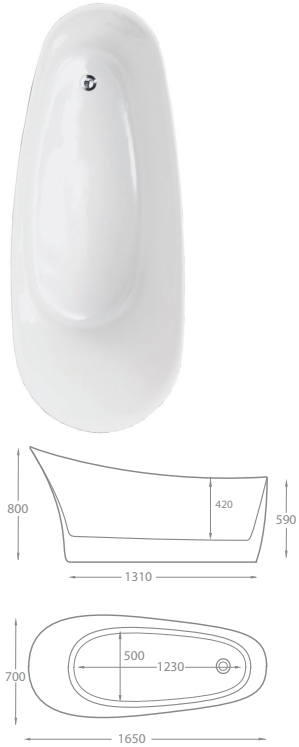

Description	Dimensions L x W x H (mm)	Ref.	Weight	Capacity	Exc. VAT	Inc. VAT
Roma Freestanding Bath	1650 x 700 x 600/800	QX-RMA1650	55kg	260 Ltr	£1,685.00	£2,022.00
Includes Pre-Fitted Click-Clack Waste						
Valentina Freestanding Bath	1700 x 750 x 580/720	QX-VAL1700	55kg	260 Ltr	£1,714.00	£2,056.80
Includes Pre-Fitted Click-Clack Waste						

Venice & Opal Baths

1700 x 850mm • 1700 x 840mm

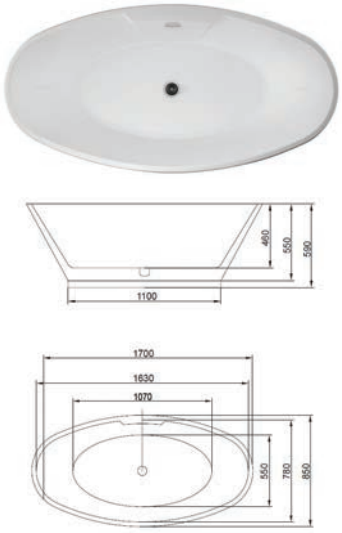

Bath not suitable for Deck-Mounted Taps

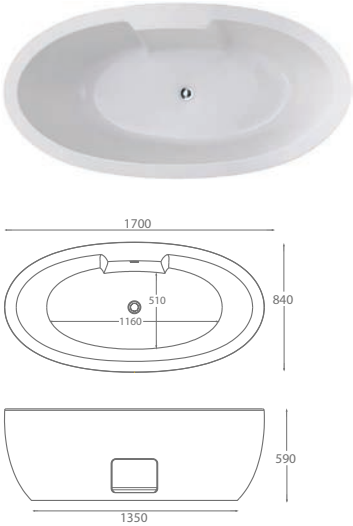

Removable Panel for easy Tap & Waste access

Description	Dimensions L x W x H (mm)	Ref.	Weight	Capacity	Exc. VAT	Inc. VAT
Venice Freestanding Bath	1700 x 850 x 590	ICN-1035	51kg	236 Ltr	£1,606.00	**£1,927.20**
Includes Pre-Fitted Click-Clack Waste						
Opal Freestanding Bath	1700 x 840 x 590	QX-OPA1700	45kg	270 Ltr	£1,678.00	**£2,013.60**
Includes Pre-Fitted Click-Clack Waste						

Oregon & Rimini Baths

1850 x 850mm • 1700 x 750mm

Oregon available with Option 4 Whisper Airspa System Only
£4,369.00 Exc. VAT
£5,242.80 Inc. VAT

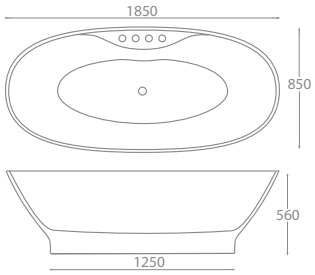

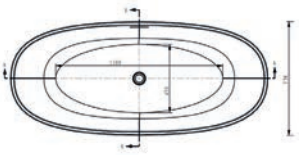

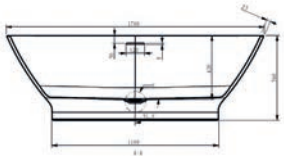

Description	Dimensions L x W x H (mm)	Ref.	Weight	Capacity	Exc. VAT	Inc. VAT
Oregon Freestanding Bath	1850 x 850 x 560	QX-ORE1850	47kg	290 Ltr	£1,751.00	**£2,101.20**
Includes Pre-Fitted Click-Clack Waste						
Rimini Freestanding Bath	1700 x 750 x 560	QX-RIM1700	38kg	260 Ltr	£1,724.00	**£2,068.80**
Includes Pre-Fitted Click-Clack Waste						

ICONIC BATHS

Grosvenor Bath

1550 x 750mm • 1700 x 750mm

10 YEAR MANUFACTURERS GUARANTEE

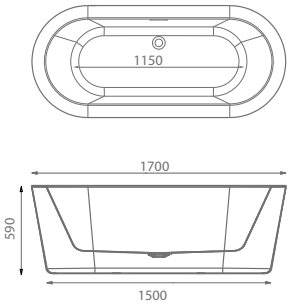

Description	Dimensions L x W x H (mm)	Ref.	Weight	Capacity	Exc. VAT	Inc. VAT
Grosvenor 1550 Freestanding Bath	1550 x 750 x 590	QX-GRO1550	37kg	250 Ltr	£1,345.00	**£1,614.00**
Grosvenor 1700 Freestanding Bath	1700 x 750 x 590	QX-GRO1700	43kg	260 Ltr	£1,458.00	**£1,749.60**

Includes Pre-Fitted Click-Clack Waste

Cornell & Monza Baths

1650 x 790mm • 1700 x 750mm

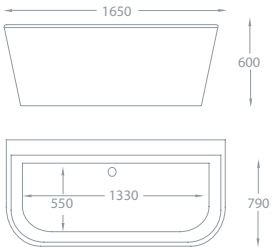

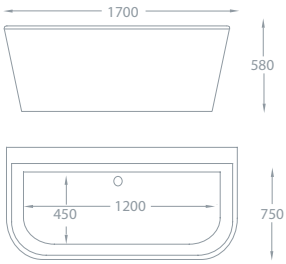

Description	Dimensions L x W x H (mm)	Ref.	Weight	Capacity	Exc. VAT	Inc. VAT
Cornell Freestanding Bath	1650 x 790 x 600	QX-COR1650	55kg	280 Ltr	£1,717.00	£2,060.40
Includes Pre-Fitted Click-Clack Waste						
Monza Freestanding Bath	1700 x 750 x 580	ICN-1029	60kg	235 Ltr	£1,651.00	**£1,981.20**
Includes Pre-Fitted Click-Clack Waste						

Como Corner & Verona Baths

1700 x 750mm • 1700 x 750mm

Right Hand Bath

Left Hand Bath

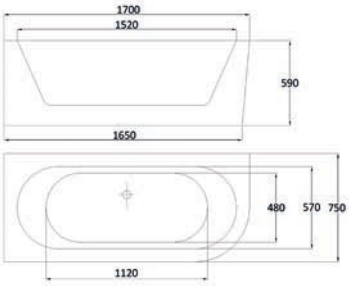

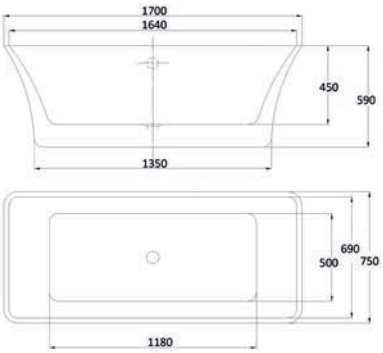

Description	Dimensions L x W x H (mm)	Ref.	Weight	Capacity	Exc. VAT	Inc. VAT
Como Freestanding Corner Bath	1700 x 750 x 590	ICN-1067	60kg	181 Ltr	£1,847.00	**£2,216.40**
Includes Pre-Fitted Click-Clack Waste						
Bath is Handed - Please specify Left Hand or Right Hand when ordering						
Verona Freestanding Bath	1700 x 750 x 580	ICN-1026	55kg	265 Ltr	£1,513.00	**£1,815.60**
Includes Pre-Fitted Click-Clack Waste						

Latina & Marino Baths

ICONIC BATHS

10 YEAR MANUFACTURERS GUARANTEE

1770 x 710mm • 1520 x 710mm • 1700 x 710mm

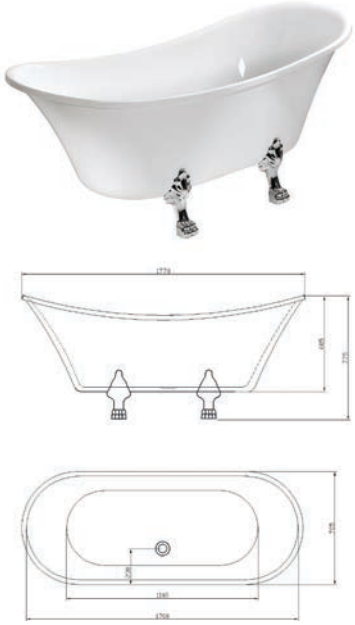

Chrome Foot Detail

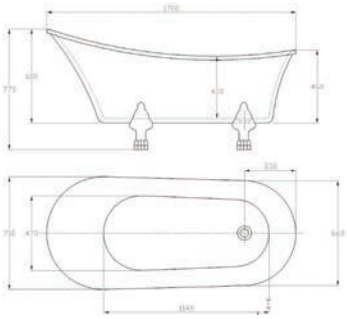

Description	Dimensions L x W x H (mm)	Ref.	Weight	Capacity	Exc. VAT	Inc. VAT
Latina Freestanding Bath & Feet	1770 x 710 x 775	ICN-831	55kg	195 Ltr	£1,110.00	£1,332.00
Marino Freestanding Bath & Feet	1520 x 710 x 770	ICN-83015A	45kg	142 Ltr	£1,064.00	£1,276.80
Marino Freestanding Bath & Feet	1700 x 710 x 770	ICN-83017A	55kg	160 Ltr	£1,090.00	£1,308.00

Marino Bath is not suitable for use with the ICW-08 Waste

Traditional Freestanding Baths

Romeo Bath • Diana Bath • Oxford Bath • Harvard Bath

Romeo Freestanding Bath Only - Feet Options Below

Dimensions L x W x H (mm)	Ref.	Weight	Capacity	Exc. VAT	Inc. VAT
1500 x 750 x 450	QX-ROM1500	38kg	245 Ltr	£620.00	£744.00
1700 x 750 x 450	QX-ROM1700	39kg	260 Ltr	£672.00	£806.40

Feet add 150mm to overall height

Suitable for the following Waste Options - See p158

• ICW-03 • ICW-04 • ICW-07

Diana Freestanding Bath Only - Feet Options Below

Dimensions L x W x H (mm)	Ref.	Weight	Capacity	Exc. VAT	Inc. VAT
1600 x 740 x 600	QX-DIA1600	40kg	245 Ltr	£654.00	£784.80
1700 x 750 x 600	QX-DIA1700	42kg	260 Ltr	£673.00	£807.60

Feet add 150mm to overall height

Suitable for the following Waste Options - See p158

• ICW-03 • ICW-04 • ICW-07 • ICW-08*

NOTE: Feet pictured no longer available

Oxford Freestanding Bath Only - Feet Options Below

Dimensions L x W x H (mm)	Ref.	Weight	Capacity	Exc. VAT	Inc. VAT
1700 x 750 x 455	QX-OXF1700	44kg	265 Ltr	£883.00	£1,059.60

Feet add 150mm to overall height

Suitable for the following Waste Options - See p158

• ICW-03 • ICW-04 • ICW-07 • ICW-08*

NOTE: Feet pictured no longer available

Harvard Freestanding Bath Only - Feet Options Below

Dimensions L x W x H (mm)	Ref.	Weight	Capacity	Exc. VAT	Inc. VAT
1700 x 750 x 500	QX-HAR1700	43kg	265 Ltr	£660.00	£792.00

Feet add 150mm to overall height

Suitable for the following Waste Options - See p158

• ICW-03 • ICW-04 • ICW-07 • ICW-08*

Feet Options

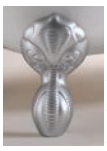

Romeo Cast Iron Feet in Painted Silver Finish
(Set of 4)
£183.00 Exc. VAT
£219.60 Inc. VAT

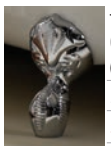

Traditional Chrome Feet
(Set of 4)
£256.00 Exc. VAT
£307.20 Inc. VAT

Iconic Feet & Waste Options

ICONIC BATHS

10 YEAR MANUFACTURERS GUARANTEE

A range of Chrome and Silver Feet options & Exposed and Non-Exposed Wastes

Romeo Cast Iron Feet

Ref: QX-ROMFEET Finish: Painted Silver

£183.00 Exc. VAT **£219.60 Inc. VAT**

Traditional Feet

Ref: QX-PETCP Finish: Chrome

£256.00 Exc. VAT **£307.20 Inc. VAT**

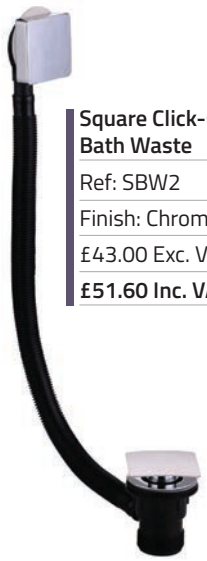

Square Click-Clack Bath Waste

Ref: SBW2

Finish: Chrome

£43.00 Exc. VAT

£51.60 Inc. VAT

Click-Clack Bath Waste

Ref: ICW-08

Finish: Chrome

£50.00 Exc. VAT

£60.00 Inc. VAT

Designed for Freestanding Baths - Excluding Marino Bath

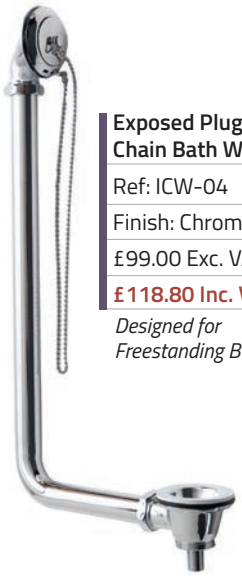

Exposed Plug & Chain Bath Waste

Ref: ICW-04

Finish: Chrome

£99.00 Exc. VAT

£118.80 Inc. VAT

Designed for Freestanding Baths

Exposed Click-Clack Bath Waste

Ref: ICW-07

Finish: Chrome

£176.00 Exc. VAT

£211.20 Inc. VAT

Designed for Freestanding Baths

Shallow Bath P-Trap

Only suitable for use with 42mm Metal Pipe

Ref: ICW-03 Finish: Chrome

£50.00 Exc. VAT **£60.00 Inc. VAT**

Click-Clack Slotted Bath Waste

Ref: ICW-01 Finish: Chrome

£42.00 Exc. VAT **£50.40 Inc. VAT**

Pair of Chrome Tap Legs

Ref: LEG-02 Finish: Chrome

£248.00 Exc. VAT

£297.60 Inc. VAT

For Deck-Mounted Bath Filler - Price does not include Tap

Chrome Pipe Shrouds

Ref: CC36T Finish: Chrome

£189.00 Exc. VAT

£226.80 Inc. VAT

These Shrouds cover the water supply pipes only.

42mm Angled Pipe - 680 x 250mm

Ref: ICW-10 Finish: Chrome Plated

£78.00 Exc. VAT **£93.60 Inc. VAT**

ICONIC BATHS

Freestanding Bath Taps

10 YEAR MANUFACTURERS GUARANTEE

A choice of Freestanding Tap options to compliment any style of Freestanding Bath

Grosvenor Floorstanding Single Lever Bath Shower Mixer (Fixed Spout)

Ref: ASC-8170B

Finish: Chrome

£444.00 Exc. VAT

£532.80 Inc. VAT

Height: 850mm to Spout
880mm Overall

Requires Minimum 1.0 bar pressure

Ohio Floorstanding Single Lever Bath Shower Mixer inc. Shower Kit

Ref: ASC-8000

Finish: Chrome

£368.00 Exc. VAT

£441.60 Inc. VAT

Height: 1060mm to Spout
1160mm Overall

Requires Minimum 1.0 bar pressure

Tuscany Floorstanding Single Lever Bath Shower Mixer inc. Shower Kit

Ref: QXG88BG

Finish: Brushed Gold

£520.00 Exc. VAT

£624.00 Inc. VAT

Height: 1011mm to Spout
1143mm Overall

Requires Minimum 1.0 bar pressure

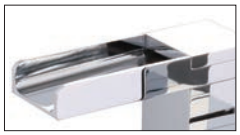

Waterfall Spout

Height:
852mm to Spout
870mm Overall

Requires Minimum 1.0 bar pressure

Arizona Floorstanding Single Lever Bath Shower Mixer inc. Shower Kit

Ref: ASC-9070B

Finish: Chrome

£325.00 Exc. VAT

£390.00 Inc. VAT

Height:
852mm to Spout
870mm Overall

Requires Minimum 1.0 bar pressure

Kansas Floorstanding Single Lever Bath Shower Mixer inc. Shower Kit

Ref: ASC-9990B

Finish: Matt Black

£362.00 Exc. VAT

£434.40 Inc. VAT

Height: 710mm
Excluding Tap

Edwardian Bath Shower Mixer with Chrome Tap Legs

Ref: ASC-8046 & LEG02

Finish: Chrome

£477.00 Exc. VAT

£572.40 Inc. VAT

Height: 877mm
Excluding Tap

Requires Minimum 1.0 bar pressure

Nigella Waterfall Spout Floorstanding Single Lever Bath Shower Mixer

Ref: ASC-8610AN

Finish: Chrome

£398.00 Exc. VAT

£477.60 Inc. VAT

Showering

The QX Showering Experience provides a complete range of products for the modern bathroom or en-suite.

Shower trays are available at 30mm, 40mm and 80mm high, including a range of Anti-Slip and textured stone in 3 colour options. In addition we offer a complete range of Wetroom Tray sizes to form your own tiled wetroom, and now feature a slim drain option.

The Ascent 10 range of shower doors is our most luxurious to date. Featuring 10mm glass and stainless steel mirror finish profiles, the result is truly exceptional. Available in either sliding door, hinge door or Walk-In options, these products will take pride of place in any upmarket bathroom setting.

Our luxury Ascent Premier 8mm Range of shower enclosures now includes a black frame with smoked glass with a quadrant, offset quadrant and sliding door option, complimented by a growing choice of black or chrome shower kits and columns.

The Ascent 8mm Range offers a wide range of enclosure options, including an infold door, sliders, quads and a selection of showerwall sizes, including a 350mm rotating deflector panel.

Our Classic Nouveau Range also has Clearview glass protection, with a luxury modern rounded handle and lifetime guarantee.

In line with current trends, we have increased the popular Ascent Premier range offering to include black frame/clear glass options. With black remaining a prominent feature within bathrooms for 2023 this will offer a modern and functional appeal.

Our latest development is to incorporate our popular Brushed Brass finish into our shower door offering. You can now pair our Genesis Showerwalls in Brushed Brass with our Atlanta Tap and Shower Valve range. We have also introduced a shower screen in the Brushed Brass finish, along with a bath waste to complete the Brushed brass look.

Our highly popular Genesis showering enclosure and bath screen range is generally 1900mm high in 6mm glass, and still includes Clearview protection at a competitive price. This range offers an extensive offering of enclosures and showerwall sizes and designs.

Our very competitive Alpha shower door range allows you to retain the look and feel expected of QX products whilst still offering fantastic value for money.

The QX Shower Valve collection will also spoil you for choice and includes push-button technology and a wide selection of manual or thermostatic shower valves, with shower kit options. Our Nostalgic Traditional exposed or concealed shower valves also include the option of black controls.

Curved Bath Screens

Clearview

All Genesis & Classic Nouveau Bath Screens come complete with Clearview Glass Protection

5 YEAR MANUFACTURERS GUARANTEE

Alpha Round Bath Screen

Ref: QXA519PSC

Size: 1360mm (H) x 800mm (W)

£133.00 Exc. VAT **£159.60 Inc. VAT**

Reversible

- Pivots both ways from wall profile

Genesis 700 Curved Bath Screen

Ref: QXGSS700

Size: 1350mm (H) x 700mm (W)

£142.00 Exc. VAT **£170.40 Inc. VAT**

Reversible

- Pivots both ways from wall profile

Genesis 800 Curved Bath Screen

Ref: QXG8SS800

Size: 1500mm (H) x 800mm (W)

£208.00 Exc. VAT **£249.60 Inc. VAT**

Reversible

- Pivots both ways from wall profile
- Rise & Fall Hinges

QX 6mm Plain Curved Bath Screen

Ref: QX106BSPSC

Size: 1300mm (H) x 700mm (W)

£198.00 Exc. VAT **£237.60 Inc. VAT**

Reversible

- Pivots both ways from wall profile

Nostalgic Curved Bath Screen

Ref: QX206BSPSC

Size: 1300mm (H) x 700mm (W)

£248.00 Exc. VAT **£297.60 Inc. VAT**

Reversible

- Pivots both ways from wall profile

Curved Bath Screens

All Genesis Bath Screens come complete with Clearview Glass Protection

QX 6mm Black Frame Curved Bath Screen

Ref: QX107BSPSC

Size: 1300mm (H) x 700mm (W)

£198.00 Exc. VAT

£237.60 Inc. VAT

6mm Glass

REVERSIBLE

- Pivots both ways from wall profile

Genesis Brushed Brass Frame Curved Bath Screen

Ref: QXG8SS800BRS

Size: 1500mm (H) x 820mm (W)

£346.00 Exc. VAT

£415.20 Inc. VAT

6mm Glass

REVERSIBLE

- Pivots both ways from wall profile

Brushed Brass Finish

Square & Over-Bath Screens

All Genesis & Classic Nouveau Bath Screens come complete with Clearview Glass Protection

5 YEAR MANUFACTURERS GUARANTEE

Alpha Square Bath Screen
Ref: QXA520PSC
Size: 1360mm (H) x 800mm (W)
£130.00 Exc. VAT
£156.00 Inc. VAT

6mm Glass
REVERSIBLE

- Pivots both ways from wall profile
- Rise & Fall Hinges

Genesis Square Bath Screen
Ref: QXGSQS800
Size: 1500mm (H) x 800mm (W)
£183.00 Exc. VAT
£219.60 Inc. VAT

6mm Glass
REVERSIBLE

- Pivots both ways from wall profile
- Rise & Fall Hinges
- 20mm Adjustment: 800-820mm

Ascent Mini Bath Screen
Ref: QX137BSPSC
Size: 1500mm (H) x 300mm (W)
£130.00 Exc. VAT
£156.00 Inc. VAT

6mm Glass
REVERSIBLE

- Panel is Fixed

Genesis Over-Bath Screens

Description	Size (W x H)	Ref.	Exc. VAT	Inc. VAT
1700mm Front Screen	1700 x 1600mm	QXOBS1700	£773.00	£927.60
1800mm Front Screen	1800 x 1600mm	QXOBS1800	£430.00	£516.00
700mm End Screen	700 x 1600mm	QXOBSP700	£137.00	£164.40
750mm End Screen	750 x 1600mm	QXOBSP750	£141.00	£169.20
800mm End Screen	800 x 1600mm	QXOBSP800	£145.00	£174.00

8mm Glass
REVERSIBLE

- 1600mm High for easy access
- 1700mm or 1800mm Sizes
- Use with or without End Screens
- Fantastic water retention
- Adjustability in the wall profile of 20mm for End & Front screens

Sail & Double Sail Bath Screens

GENESIS

Clearview All Genesis Bath Screens come complete with Clearview Glass Protection

Genesis Sail Bath Screen

Ref: QXGSS900

Size: 1500mm (H) x 900mm (W)

£199.00 Exc. VAT

£238.80 Inc. VAT

6mm Glass

REVERSIBLE

- Pivots both ways from wall profile
- Rise & Fall Hinges
- 20mm Adjustment: 900-920mm

Genesis Double Sail Bath Screen

Ref: QXGSSD1200

Size: 1500mm (H) x 1200mm (W)

£273.00 Exc. VAT

£327.60 Inc. VAT

6mm Glass

REVERSIBLE

- Small Panel is fixed
- Large panel pivots both ways
- Fixed Panel measures 291mm
- Large Panel measures 853mm (widest point)
- Rise & Fall Hinges
- 15mm Adjustment: 1200-1215mm

Half Sail & Double Curved

Clearview All Ascent Bath Screens come complete with Clearview Glass Protection

10 YEAR MANUFACTURERS GUARANTEE

Ascent Half Sail Luxury Bath Screen

Ref: QX110BSPSC

Size: 1400mm (H) x 800mm (W)

£287.00 Exc. VAT

£344.40 Inc. VAT

6mm Glass

REVERSIBLE

- Rise & Fall Hinges
- Pivots both ways from wall profile

Ascent Double Curved Luxury Bath Screen

Ref: QX118BSPSC

Size: 1400mm (H) x 1100mm (W)

£383.00 Exc. VAT

£459.60 Inc. VAT

6mm Glass

REVERSIBLE

- Small Panel is fixed
- Large panel pivots both ways
- Fixed Panel measures 300mm
- Rise & Fall Hinges

Radius & Square Bath Screens

10 YEAR MANUFACTURERS GUARANTEE

Clearview All Ascent Bath Screens come complete with Clearview Glass Protection

Ascent Radius Curved Bath Screen

Ref: QX140BSPSC

Size: 1500mm (H) x 1000mm (W)

£331.00 Exc. VAT

£397.20 Inc. VAT

6mm Glass

REVERSIBLE

- Increased Width
- Pivots both ways from wall profile

Ascent Square Bath Screen

Ref: QX139BSPSC

Size: 1500mm (H) x 900mm (W)

£316.00 Exc. VAT

£379.20 Inc. VAT

6mm Glass

REVERSIBLE

- Increased Width
- Pivots both ways from wall profile

GENESIS DELUXE

Deluxe 2-Fold Bath Screen

10 YEAR MANUFACTURERS GUARANTEE

Features magnetic hinges that hold the screen flat when in its fully extended position, whilst still maintaining the ability for the screen to fold against the wall.

Genesis Deluxe Square 2-Fold Bath Screen

Ref: QX2FLDSQ

Size: 1350mm (H) x 920mm (W)

£224.00 Exc. VAT **£268.80 Inc. VAT**

6mm Glass

REVERSIBLE

- First Panel from Wall Profile pivots both ways
- Second Panel fold onto the inside of the First Panel
- Panel Widths - First: 437mm, Second: 406mm
- Unique Magnetic Hinges
- Includes Chrome Drip Strip which attaches to the bath

Folds Flat to Wall

Concealed Magnetic Hinges

2-Fold Screen

All Genesis Bath Screens come complete with Clearview Glass Protection

Genesis 2-Fold Bath Screen

Ref: QXG2FLD900

Size: 1350mm (H) x 900mm (W)

£219.00 Exc. VAT

£262.80 Inc. VAT

6mm Glass

REVERSIBLE

- First Panel from Wall Profile pivots both ways
- Second Panel fold onto the outside of the First Panel
- First Panel Width - 438mm
- Second Panel Width - 407mm
- Includes Chrome Drip Strip which attaches to the bath
- 20mm Adjustment - 900-920mm

GENESIS DELUXE

3 & 4-Fold Bath Screens

10 YEAR MANUFACTURERS GUARANTEE

Features magnetic hinges that hold the screen flat when in its fully extended position, whilst still maintaining the ability for the screen to fold against the wall.

Screen Pictured Right Hand

Genesis 3-Fold Bath Screen - Left or Right Hand

Ref: QXG3FLDSQ-LH/RH

Size: 1500mm (H) x 1265mm (W)

£352.00 Exc. VAT

£422.40 Inc. VAT

6mm Glass

- Screen is Handed - LH or RH
- First Panel from Wall Profile is Fixed
- Second and Third Panels fold in towards the bath, on the inside of the First Fixed Panel
- First Panel Width - 469mm
- Second and Third Panel Width - 371mm each
- 15mm Adjustment - 1250-1265mm
- Unique Magnetic Hinges

Screen Pictured Right Hand

Genesis 4-Fold Bath Screen - Left or Right Hand

Ref: QXG4FLDSQ-LH/RH

Size: 1500mm (H) x 1000mm (W)

£410.00 Exc. VAT

£492.00 Inc. VAT

6mm Glass

- Screen is Handed - LH or RH
- First panel from Wall Profile is fixed
- Second, Third and Fourth Panels fold in towards the bath, on the inside of the First Fixed Panel
- 15mm Adjustment - 1000-1015mm
- Unique Magnetic Hinges

Concealed Magnetic Hinges

2-Fold Bath Screen

Classic Nouveau

10 YEAR MANUFACTURERS GUARANTEE

Clearview All Classic Nouveau Bath Screens come complete with Clearview Glass Protection

Classic Nouveau 2-Fold Bath Screen
Ref: QX141BSPSC
Size: 1400mm (H) x 860mm (W)
£274.00 Exc. VAT
£328.80 Inc. VAT

4mm Glass

REVERSIBLE

- First Panel pivots both ways from the wall profile
- Second Panel pivots one way (direction depends on fitting)

Classic Nouveau

3 & 4-Fold Bath Screens

Clearview All Classic Nouveau Bath Screens come complete with Clearview Glass Protection

10 YEAR MANUFACTURERS GUARANTEE

Classic Nouveau 3-Fold Bath Screen

Ref: QX142BSPSC

Size: 1400mm (H) x 860mm (W)

£329.00 Exc. VAT

£394.80 Inc. VAT

4mm Glass

REVERSIBLE

- First Panel pivots both ways from the wall profile
- Second and Third Panels pivot alternate ways (direction depends on fitting)

QX 4-Fold Bath Screen

Ref: QX138BSPSC

Size: 1400mm (H) x 865mm (W)

£358.00 Exc. VAT **£429.60 Inc. VAT**

4mm Glass

REVERSIBLE

- Each small panel pivots 1 way
- Pivots both ways from wall profile

Ascent 10 Walk-In

ASCENT 10

10mm Glass Stainless Steel

Panels can be installed in a Niche

Can be used with the Ascent Deflector Panel
(NOTE: Deflector profile is polished silver NOT Stanless Steel)

Ascent 10 Walk-In Panels

10mm Glass | HEIGHT 2000mm | REVERSIBLE | Double-Sided Clearview Easy Clean Glass

Size	Ref.	Adjustability	Exc. VAT	Inc. VAT
700mm	ASC650SS	680-700mm	£359.00	**£430.80**
760mm	ASC651SS	740-760mm	£375.00	**£450.00**
800mm	ASC652SS	780-800mm	£384.00	**£460.80**
900mm	ASC653SS	880-900mm	£427.00	**£512.40**
1000mm	ASC654SS	980-1000mm	£454.00	**£544.80**
1200mm	ASC655SS	1180-1200mm	£503.00	**£603.60**
1400mm	ASC656SS	1380-1400mm	£562.00	**£674.40**
1600mm	ASC657SS	1580-1600mm	£616.00	**£739.20**
Additional Walk-In Support Bar		Ref: ASC10SB	£82.00	**£98.40**
Additional 'T' Piece to connect Side Panel Support Bar to Front Panel Support Bar		Ref: ASC11SB	£84.00	**£100.80**

Ascent 350 Rotating Deflector Panel

Size	Ref.	Exc. VAT	Inc. VAT
350mm	ASCRP40PSC	£323.00	**£387.60**

- **All Walk-In Panel sizes are supplied with a Horizontal Support Bar**
- **Horizontal Support Bar is supplied 1200mm long and should be cut down as required**
- **Additional Support Bars can be purchased separately**
- **Panels can be installed in a Niche** *(image top right)* **or by using a smaller size panel as an End Panel**
- **Panels can be used with the Ascent 350MM Deflector Panel** *(image bottom right)* *(NOTE: Deflector profile is polished silver NOT Stanless Steel)*

Ascent 10 Hinged

10mm Glass | Stainless Steel

LIFETIME MANUFACTURERS GUARANTEE

ASCENT 10 900mm Hinged Door & 900mm Side Panel

ASCENT 10 1000 & 1200mm Hinged Door design, Hinge affixes into fixed glass panel

- **900mm Hinged Doors - The Hinges attach directly to the wall profile** *(image left)*
- **1000mm & 1200mm Hinged Doors - The Hinges attach to a fixed glass panel** *(image above)*
- **Hinged Doors are supplied with a wall profile incorporating a magnetic seal for niche application**
- **Fixed Glass Hinged Panel must be fitted to the wall as pictured. NOT suitable for installation directly on to the Side Panel**

Chrome Drip Strip attached to inside of Hinged Door allowing water to run back into the tray

10mm Glass | HEIGHT 2000mm | REVERSIBLE | Double-Sided Clearview *Easy Clean Glass*

Ascent 10 Hinged Door

Size	Ref.	Adjustability / With Side Panel	Door Opening	Fixed Panel	Exc. VAT	Inc. VAT
900mm	ASC630SS	875-890mm / 861-876mm	776mm	n/a	£730.00	**£876.00**
1000mm	ASC631SS	970-990mm / 956-976mm	580mm	370-390mm	£921.00	**£1,105.20**
1200mm	ASC632SS	1170-1190mm / 1156-1176mm	630mm	520-540mm	£969.00	**£1,162.80**

Ascent 10 Hinged Side Panels

Only for use with Ascent 10 Hinged Doors

Size	Ref.	Adjustability With 900mm Door (no Extension Panel)	Adjustability With 1000mm or 1200mm Door & 900mm Door (with Extension Panel)	Exc. VAT	Inc. VAT
700mm	ASC640SS	670-690mm	653-673mm	£422.00	**£506.40**
800mm	ASC641SS	770-790mm	753-773mm	£443.00	**£531.60**
900mm	ASC642SS	870-890mm	853-873mm	£467.00	**£560.40**

These Side Panels fix to the wall with a Chrome 'L' Bracket *(included)*

Ascent 10 Hinged

ASCENT 10

10mm Glass | Stainless Steel

ASCENT 10 1500mm Enclosure, comprising 1200mm Hinged Door & 300mm Extension Panel with Chrome Wall Fixing Bracket

Fixed Glass Hinged Panel must be fitted to the wall as pictured. NOT suitable for installation directly on to the Side Panel

10mm Glass | HEIGHT 2000mm | REVERSIBLE | Double-Sided Clearview *Easy Clean Glass*

Ascent 10 Hinged Door

Size	Ref.	Adjustability / With Side Panel	Door Opening	Fixed Panel	Exc. VAT	Inc. VAT
900mm	ASC630SS	875-890mm / 861-876mm	776mm	n/a	£730.00	**£876.00**
1000mm	ASC631SS	970-990mm / 956-976mm	580mm	370-390mm	£921.00	**£1,105.20**
1200mm	ASC632SS	1170-1190mm / 1156-1176mm	630mm	520-540mm	£969.00	**£1,162.80**

Ascent 10 Extension Panels

Can be added to any Ascent 10 Hinged Door

Size	Ref.	Adjustability in Niche Installation	Adjustability With Side Panel	Exc. VAT	Inc. VAT
300mm	ASC633SS	290-310mm	No Adjustability (300mm)	£107.00	**£128.40**
400mm	ASC634SS	390-410mm	No Adjustability (400mm)	£127.00	**£152.40**
500mm	ASC635SS	490-510mm	No Adjustability (500mm)	£146.00	**£175.20**

- Extension Panels can be fitted to any Ascent 10 Hinged Door to give extra width to an enclosure.
- Extension Panels fitted with Side Panel require a Chrome **Side** Fixing Bracket *(NOT included)*
- Extension Panels fitted in a niche require a Chrome **Wall** Fixing Bracket *(NOT included)*
- Fixing Brackets priced opposite

ASCENT 10 1500mm Enclosure, comprising 1200mm Hinged Door & 300mm Extension Panel with Side Panel & Chrome Side Fixing Bracket

ASCENT 10 900mm Hinged Door & 900mm Side Panel

ASCENT 10 Hinge Detail

The Ascent 10 Hinged Door range offers excellent versatility, with a choice of Side Panels and Extension Panel options to suit every installation. This guide will help you select the best options to get the maximum potential from this range.

STEP 1

Select your Door

Ascent 10 Hinged Door

Size	Ref.	Adjustability / With Side Panel	Door Opening	Fixed Panel	Exc. VAT	Inc. VAT
900mm	ASC630SS	875-890mm / 861-876mm	776mm	n/a	£730.00	**£876.00**
1000mm	ASC631SS	970-990mm / 956-976mm	580mm	370-390mm	£921.00	**£1,105.20**
1200mm	ASC632SS	1170-1190mm / 1156-1176mm	630mm	520-540mm	£969.00	**£1,162.80**

STEP 2

Select your Extension Panel if required

Ascent 10 Extension Panels - *Can be added to any Ascent 10 Hinged Door*

Size	Ref.	Adjustability in Niche Installation	Adjustability With Side Panel	Exc. VAT	Inc. VAT
300mm	ASC633SS	290-310mm	No Adjustability (300mm)	£107.00	**£128.40**
400mm	ASC634SS	390-410mm	No Adjustability (400mm)	£127.00	**£152.40**
500mm	ASC635SS	490-510mm	No Adjustability (500mm)	£146.00	**£175.20**

STEP 3

Only required if Extension Panel is used - if not move to Step 4

STEP 3a

If installing the Extension Panel with a Side Panel (Glass to Glass)

Size	Ref.	Exc. VAT	Inc. VAT
Side Fixing Bracket	ASC660SS	£187.00	**£224.40**

STEP 3b

If installing the Extension Panel in a niche (Glass to Wall)

Size	Ref.	Exc. VAT	Inc. VAT
Wall Fixing Bracket	ASC661SS	£198.00	**£237.60**

STEP 4

Select your Side Panel if required

Ascent 10 Hinged Side Panels - *Only for use with Ascent 10 Hinged Doors*

Size	Ref.	Adjustability With 900mm Door (no Extension Panel)	Adjustability With 1000mm or 1200mm Door & 900mm Door (with Extension Panel)	Exc. VAT	Inc. VAT
700mm	ASC640SS	670-690mm	653-673mm	£422.00	**£506.40**
800mm	ASC641SS	770-790mm	753-773mm	£443.00	**£531.60**
900mm	ASC642SS	870-890mm	853-873mm	£467.00	**£560.40**

Side Panel includes Chrome 'L' Bracket to fix to wall

Ascent 10 Quadrant

ASCENT 10

10mm Glass | Stainless Steel

ASCENT 10 900mm Quadrant Enclosure

10mm Glass | HEIGHT 2000mm | REVERSIBLE | Double-Sided Clearview Easy Clean Glass

Ascent 10 Quadrant Enclosure

Size	Ref.	Adjustability	Door Opening	Exc. VAT	Inc. VAT
800mm	ASC610SS	770-790mm	412mm	£898.00	**£1,077.60**
900mm	ASC611SS	870-890mm	412mm	£950.00	**£1,140.00**

Ascent 10 Offset Quadrant

Size	Ref.	Adjustability	Door Opening	Exc. VAT	Inc. VAT
1000 x 800mm	ASC612SS	970-990mm / 770-790mm	464mm	£961.00	**£1,153.20**

Double Metal Rollers Top & Bottom

ASCENT 10

Ascent 10 Sliding Door

10mm Glass | Stainless Steel

LIFETIME MANUFACTURERS GUARANTEE

ASCENT 10 1200mm Hinged Door & 900mm Side Panel

ASCENT 10 1200mm Sliding Door in Niche application

ASCENT 10 Magnetic Profile for Niche application

10mm Glass | HEIGHT 2000mm | REVERSIBLE | Double-Sided Clearview Easy Clean Glass

Ascent 10 Sliding Door

Size	Ref.	Adjustability / With Side Panel	Door Opening	Exc. VAT	Inc. VAT
1000mm	ASC601SS	970-990mm / 976-996mm	385mm	£811.00	**£973.20**
1200mm	ASC602SS	1170-1190mm / 1176-1196mm	485mm	£857.00	**£1,028.40**
1400mm	ASC603SS	1370-1390mm / 1376-1396mm	585mm	£906.00	**£1,087.20**

Ascent 10 Sliding Door Side Panels *Only for use with Ascent 10 Sliding Doors*

Size	Ref.	Adjustability	Exc. VAT	Inc. VAT
700mm	ASC620SS	670-690mm	£372.00	**£446.40**
800mm	ASC621SS	770-790mm	£382.00	**£458.40**
900mm	ASC622SS	870-890mm	£405.00	**£486.00**

- Sliding Doors supplied with Magnetic Profile for Niche installation
- Magnetic Profile not required if installing door with a Side Panel

Premier Hinged Door & Inline

All Ascent Premier Enclosures come complete with Double-Sided Clearview Glass Protection

Enclosure can be installed with a Side Panel or in a Recess Application

8mm Glass | HEIGHT 2000mm | REVERSIBLE | Double-Sided Clearview Easy Clean Glass

- Smaller Panel is Fixed
- Power Shower Tested
- Available with Silver or Matt Black Frame
- IMPORTANT: Side Panels can only be fitted on the 'door closing' side of this enclosure, as pictured and CANNOT be fitted to the fixed Inline panel

Premier Hinged Door & Inline Panel			Polished Silver			Matt Black		
Size	Adjustability / With Side Panel	Door Opening	Ref.	Exc. VAT	Inc. VAT	Ref.	Exc. VAT	Inc. VAT
900mm	870-890mm / 855-875mm	537mm	PR200HDPSC	£632.00	**£758.40**	-	-	-
1000mm	970-990mm / 955-975mm	637mm	PR201HDPSC	£647.00	**£776.40**	PR701HDBC	£647.00	**£776.40**
1200mm	1170-1190mm / 1155-1175mm	637mm	PR202HDPSC	£706.00	**£847.20**	PR702HDBC	£706.00	**£847.20**
1400mm	1370-1390mm / 1355-1375mm	637mm	PR203HDPSC	£755.00	**£906.00**	-	-	-

Side Panels - *Can be used with the Ascent Premier Hinged & Roller Ranges*

Size	Adjustability	Door Opening	Ref.	Exc. VAT	Inc. VAT	Ref.	Exc. VAT	Inc. VAT
700mm	670-690mm	-	PR206SPPSC	£271.00	**£325.20**	-	-	-
760mm	730-750mm	-	PR207SPPSC	£283.00	**£339.60**	-	-	-
800mm	770-790mm	-	PR208SPPSC	£291.00	**£349.20**	PR708SPBC	£291.00	**£349.20**
900mm	870-890mm	-	PR209SPPSC	£302.00	**£362.40**	PR709SPBC	£302.00	**£362.40**

Premier Hinged Quadrants

All Ascent Premier Enclosures come complete with Double-Sided Clearview Glass Protection

800 & 900mm Hinged Quads are LH Hinge, RH Handle, but are reversible to create RH Hinge, LH Handle.

When installed on a Right Hand Tray, Hinged Offset Quads are LH Hinge, RH Handle

When installed on a Left Hand Tray, Hinged Offset Quads are RH Hinge, LH Handle

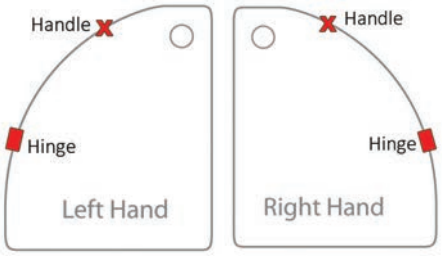

8mm Glass

HEIGHT 2000mm

REVERSIBLE

Double-Sided Clearview Easy Clean Glass

- Standard Quads are Reversible
- Offset Quads are Reversible but subject to the above conditions
- Power Shower Tested

Premier Hinged Quadrants

Size	Ref.	Adjustability	Door Opening	Exc. VAT	Inc. VAT
800mm	PR210QUPSC	770-790mm	640mm	£840.00	**£1,008.00**
900mm	PR211QUPSC	870-890mm	640mm	£888.00	**£1,065.60**

Premier Hinged Offset Quadrants

Size	Ref.	Adjustability	Door Opening	Exc. VAT	Inc. VAT
1000 x 800mm	PR213QUPSC	970-990mm / 770-790mm	640mm	£892.00	**£1,070.40**
1200 x 800mm	PR214QUPSC	1170-1190mm / 770-790mm	640mm	£945.00	**£1,134.00**
1200 x 900mm	PR215QUPSC	1170-1190mm / 870-890mm	640mm	£969.00	**£1,162.80**

Premier Roller Quadrants

10 YEAR MANUFACTURERS GUARANTEE

ascent PREMIER

Clearview All Ascent Premier Enclosures come complete with Double-Sided Clearview Glass Protection

Offset Quadrant Enclosure above is pictured Right Hand - Handle is on the left with the door sliding open to the right

Offset Quadrant Enclosure above is pictured Left Hand - Handle is on the right with the door sliding open to the left

Standard Quads supplied with RH Handle Only

8mm Glass

HEIGHT 2000mm

Double-Sided Clearview Easy Clean Glass

- NOT Reversible
- Power Shower Tested

Premier Roller Quadrants

			Polished Silver			Matt Black		
Size	**Adjustability**	**Door Opening**	**Ref.**	**Exc. VAT**	**Inc. VAT**	**Ref.**	**Exc. VAT**	**Inc. VAT**
800mm	770-790mm	407mm	PR306QUPSC	£776.00	**£931.20**	-	-	-
900mm	870-890mm	460mm	PR308QUPSC	£846.00	**£1,015.20**	PR808QUBC	£846.00	**£1,015.20**
1000mm	970-990mm	460mm	PR310QUPSC	£889.00	**£1,066.80**	-	-	-

Premier Roller Offset Quadrants

Size	Ref.	Adjustability	Door Opening	Exc. VAT	Inc. VAT
1000 x 800mm - LH	PR311QUPSC	970-990mm / 770-790mm	407mm	£808.00	**£969.60**
1000 x 800mm - RH	PR312QUPSC	970-990mm / 770-790mm	407mm	£808.00	**£969.60**
1200 x 800mm - LH	PR313QUPSC	1170-1190mm / 770-790mm	407mm	£846.00	**£1,015.20**
1200 x 800mm - RH	PR314QUPSC	1170-1190mm / 770-790mm	407mm	£846.00	**£1,015.20**
1200 x 900mm - LH	PR315QUPSC	1170-1190mm / 870-890mm	460mm	£897.00	**£1,076.40**
1200 x 900mm - RH	PR316QUPSC	1170-1190mm / 870-890mm	460mm	£897.00	**£1,076.40**

Offset Quads supplied RH Tray, LH Handle & LH Tray, RH Handle

Please specify Hand when ordering

Premier Roller Quadrants

All Ascent Premier Enclosures come complete with Double-Sided Clearview Glass Protection

8mm Glass

HEIGHT 2000mm

Double-Sided Clearview Easy Clean Glass

- NOT Reversible
- Power Shower Tested

Premier Roller Quadrants

Size	Ref.	Adjustability	Door Opening	Exc. VAT	Inc. VAT
900mm Right Hand	PR407QUBB	870-890mm	460mm	£953.00	**£1,143.60**

Premier Roller Offset Quadrants

Size	Ref.	Adjustability	Door Opening	Exc. VAT	Inc. VAT
1000 x 800mm Left Hand	PR405QUBB	970-990mm / 770-790mm	407mm	£924.00	**£1,108.80**
1000 x 800mm Right Hand	PR406QUBB	970-990mm / 770-790mm	407mm	£924.00	**£1,108.80**

Offset Quadrant Handing Information Detailed on p180

Premier Roller Sliding Door

10 YEAR MANUFACTURERS GUARANTEE

ascent PREMIER

Clearview All Ascent Premier Enclosures come complete with Double-Sided Clearview Glass Protection

Enclosure can be installed with a Side Panel or in a Recess Application

8mm Glass

HEIGHT 2000mm

REVERSIBLE

Double-Sided Clearview *Easy Clean Glass*

- Smaller Panel is Fixed
- Power Shower Tested
- Available with Polished Silver or Matt Black Frame
- Side Panel can only be fitted on the 'door closing' side of the enclosure, as pictured

Premier Roller Sliding Door			Polished Silver			Matt Black		
Size	**Adjustability / With Side Panel**	**Door Opening**	**Ref.**	**Exc. VAT**	**Inc. VAT**	**Ref.**	**Exc. VAT**	**Inc. VAT**
1000mm	970-990mm / 968-988mm	400mm	PR300SLPSC	£643.00	**£771.60**	PR800SLBC	£643.00	**£771.60**
1200mm	1170-1190mm / 1168-1188mm	500mm	PR301SLPSC	£666.00	**£799.20**	PR801SLBC	£666.00	**£799.20**
1400mm	1370-1390mm / 1368-1388mm	600mm	PR302SLPSC	£712.00	**£854.40**	-	-	-
1600mm	1570-1590mm / 1568-1588mm	600mm	PR303SLPSC	£752.00	**£902.40**	-	-	-
1700mm	1670-1690mm / 1668-1688mm	600mm	PR304SLPSC	£771.00	**£925.20**	-	-	-
1800mm	1770-1790mm / 1768-1788mm	600mm	PR305SLPSC	£810.00	**£972.00**	-	-	-

Side Panels - *Can be used with the Ascent Premier Hinged & Roller Ranges*

Size	Adjustability	Door Opening	Ref.	Exc. VAT	Inc. VAT	Ref.	Exc. VAT	Inc. VAT
700mm	670-690mm	-	PR206SPPSC	£271.00	**£325.20**	-	-	-
760mm	730-750mm	-	PR207SPPSC	£283.00	**£339.60**	-	-	-
800mm	770-790mm	-	PR208SPPSC	£291.00	**£349.20**	PR708SPBC	£291.00	**£349.20**
900mm	870-890mm	-	PR209SPPSC	£302.00	**£362.40**	PR709SPBC	£302.00	**£362.40**

Premier Roller Sliding Door

All Ascent Premier Enclosures come complete with Double-Sided Clearview Glass Protection

8mm Glass

HEIGHT 2000mm

REVERSIBLE

Double-Sided Clearview *Easy Clean Glass*

- Smaller Panel is Fixed
- Power Shower Tested
- Side Panel can only be fitted on the 'door closing' side of the enclosure, as pictured

Enclosure can be installed with a Side Panel or in a Recess Application

Premier Roller Sliding Door - Smoked Glass

Size	Ref.	Adjustability / With Side Panel	Door Opening	Exc. VAT	Inc. VAT
1000mm	PR400SLBB	970-990mm / 968-988mm	400mm	£714.00	**£856.80**
1200mm	PR401SLBB	1170-1190mm / 1168-1188mm	500mm	£736.00	**£883.20**

Premier Side Panels - Smoked Glass

Size	Ref.	Adjustability	Door Opening	Exc. VAT	Inc. VAT
800mm	PR408SPBB	770-790mm	-	£343.00	**£411.60**
900mm	PR409SPBB	870-890mm	-	£351.00	**£421.20**

Premier Roller 'D' Shaped Quadrant

10 YEAR MANUFACTURERS GUARANTEE

ascent PREMIER

Clearview All Ascent Premier Enclosures come complete with Double-Sided Clearview Glass Protection

8mm Glass

HEIGHT 2000mm

Double-Sided Clearview
Easy Clean Glass

- NOT Reversible
  Enclosure is handed as pictured
- Power Shower Tested
- Must be used with dedicated tray detailed
- Tray has a 90mm Waste Hole *(Waste Not Included)* and is NOT available as an Easyplumb option

Product	Size	Ref.	Adjustability	Door Opening	Exc. VAT	Inc. VAT
Premier 'D' Shaped Enclosure	985 x 844mm	PR317QUPSC	825-830 / 962-980mm	550mm	£1,147.00	**£1,376.40**
Premier 'D' Shaped 30mm Stone Tray	985 x 844mm	ASC/D985	-	-	£244.00	**£292.80**
Enclosure Combination Total					**£1,391.00**	**£1,669.20**

Premier Hinged Pentangle

All Ascent Premier Enclosures come complete with Double-Sided Clearview Glass Protection

8mm Glass

HEIGHT 2000mm

REVERSIBLE

Double-Sided Clearview *Easy Clean Glass*

- Power Shower Tested
- Can be used with any standard Pentangle Tray

Product	Size	Ref.	Adjustability	Door Opening	Exc. VAT	Inc. VAT
Premier Pentangle Enclosure	900mm	PR319PEPSC	870-890mm	665mm	£799.00	**£958.80**
Premier 900mm Pentangle 30mm Stone Tray	900mm	ASC9P	-	-	£265.00	**£318.00**
Enclosure Combination Total					**£1,064.00**	**£1,276.80**

Ascent In-Fold & Hinged Doors

10 YEAR MANUFACTURERS GUARANTEE

ascent

Clearview All Ascent Enclosures come complete with Clearview Glass Protection

When fully open, the protrusion from the frame is as follows:
800mm = 282mm / 900mm = 332mm

In-Fold Door with Side Panel

Hinged Door with Side Panel

8mm Glass

HEIGHT 1950mm

REVERSIBLE

Clearview Easy Clean Glass

- Internal & External Handle
- Power Shower Tested
- Compatible Side Panels on p187
- Alternative Tray Options on p208-223

Ascent In-fold Door*

Size	Ref.	Adjustability	Door Opening	Exc. VAT	Inc. VAT
800mm*	ASCIF44PSC	760-800mm	555mm	£666.00	**£799.20**
900mm*	ASCIF45PSC	860-900mm	655mm	£695.00	**£834.00**

Genesis 40mm Tray Option

Size	Exc. VAT	Inc. VAT
800 x 800mm	£146.00	£175.20
900 x 900mm	£210.00	£252.00

Ascent Hinged Door

Size	Ref.	Adjustability	Door Opening	Exc. VAT	Inc. VAT
800mm	ASCHI13PSC	760-800mm	619mm	£615.00	**£738.00**
900mm	ASCHI14PSC	860-900mm	719mm	£641.00	**£769.20**
1000mm	ASCHI15PSC	960-1000mm	819mm	£667.00	**£800.40**

Genesis 40mm Tray Option

Size	Exc. VAT	Inc. VAT
800 x 800mm	£146.00	£175.20
900 x 900mm	£210.00	£252.00
1000 x 800mm	£270.00	£324.00

*While Stocks Last

Ascent Sliding Door & Side Panels

Clearview All Ascent Enclosures come complete with Clearview Glass Protection

10 YEAR MANUFACTURERS GUARANTEE

Enclosure pictured in a Recess Application

8mm Glass

HEIGHT 1950mm

REVERSIBLE

Clearview *Easy Clean Glass*

- Quick Release Rollers
- Internal & External Handle
- Power Shower Tested
- Compatible Side Panels below
- Alternative Tray Options on p208-223

Ascent Sliding Door

Size	Ref.	Adjustability	Door Opening	Exc. VAT	Inc. VAT
1000mm	ASCSL16PSC	960-1000mm	370mm	£593.00	**£711.60**
1200mm	ASCSL18PSC	1160-1200mm	470mm	£677.00	**£812.40**
1500mm	ASCSL20PSC	1460-1500mm	620mm	£762.00	**£914.40**

Genesis 40mm Tray Option

Size	Exc. VAT	Inc. VAT
1000 x 800mm	£270.00	**£324.00**
1200 x 900mm	£273.00	**£327.60**
1500 x 800mm	£471.00	**£565.20**

Side Panels

Size	Ref.	Adjustability	Door Opening	Exc. VAT	Inc. VAT
700mm	ASCSP08PSC	680-700mm	-	£311.00	**£373.20**
760mm	ASCSP09PSC	740-760mm	-	£346.00	**£415.20**
800mm	ASCSP10PSC	780-800mm	-	£332.00	**£398.40**
900mm	ASCSP11PSC	880-900mm	-	£352.00	**£422.40**

Ascent Quadrants

All Ascent Enclosures come complete with Clearview Glass Protection

2-Door Quadrant

1-Door Offset Quadrant
Pictured on Left Hand Tray

8mm Glass

HEIGHT 1950mm

REVERSIBLE

Clearview Easy Clean Glass

- Quick Release Rollers
- Internal & External Handle
- Power Shower Tested
- Alternative Tray Options on p208-223

Ascent 2-Door Quadrant

Size	Ref.	Adjustability	Door Opening	Exc. VAT	Inc. VAT
800mm	ASCQU01PSC	770-790mm	400mm	£815.00	**£978.00**
900mm	ASCQU02PSC	870-890mm	540mm	£856.00	**£1,027.20**
1000mm	ASCQU03PSC	970-990mm	540mm	£890.00	**£1,068.00**

Genesis 40mm Tray Option

Size	Exc. VAT	Inc. VAT
800mm Quad	£210.00	£252.00
900mm Quad	£228.00	£273.60
1000mm Quad	£395.00	£474.00

Ascent 1-Door Offset Quadrant

Size	Ref.	Adjustability	Door Opening	Exc. VAT	Inc. VAT
1200 x 800mm	ASCQU06PSC	1170-1190mm / 770-790mm	420mm	£886.00	**£1,063.20**
1200 x 900mm	ASCQU07PSC	1170-1190mm / 870-890mm	460mm	£913.00	**£1,095.60**

Genesis 40mm Tray Option

Size	Exc. VAT	Inc. VAT
12/800mm Quad	£344.00	£412.80
12/900mm Quad	£347.00	£416.40

Classic Nouveau

Nostalgic Pivot

LIFETIME MANUFACTURERS GUARANTEE

Clearview All Classic Nouveau Enclosures come complete with Clearview Glass Protection

Only £723.60 Inc. VAT

6mm Glass

HEIGHT 1900mm

REVERSIBLE

Clearview *Easy Clean Glass*

- Internal & External Handle
- Alternative Tray Options on p208-223
- Power Shower Tested

Classic Nouveau Nostalgic Pivot Doors

Size	Ref.	Adjustability	Door Opening	Exc. VAT	Inc. VAT
800mm	QX6CN50PSC	755-795mm	573mm	£508.00	£609.60
900mm	QX6CN51PSC	855-895mm	673mm	£524.00	£628.80

Ascent 30mm Cast Stone Tray Options

Size	Exc. VAT	Inc. VAT
800 x 800mm	£224.00	£268.80
900 x 900mm	£249.00	£298.80

Classic Nouveau Nostalgic Side Panels

Size	Ref.	Adjustability	Door Opening	Exc. VAT	Inc. VAT
800mm	QX6CN60PSC	765-785mm	-	£351.00	£421.20
900mm	QX6CN61PSC	865-885mm	-	£370.00	£444.00

Nostalgic Thermostatic Valve & Rigid Riser Kit
Black or White Handles *Min. Pressure Req. - 0.2 bar*

Ref: NOSKITB/W Dimensions: 1220mm High

Finish: Chrome/Black or Chrome/White

£562.00 Exc. VAT £674.40 Inc. VAT

Classic Pivot & Bi-Fold Doors

Classic Nouveau

LIFETIME MANUFACTURERS GUARANTEE

Clearview All Classic Nouveau Enclosures come complete with Clearview Glass Protection

Pivot Door in Recess Application

Bi-Fold Door with Side Panel

6mm Glass

HEIGHT 1900mm

REVERSIBLE

Clearview Easy Clean Glass

- Internal & External Handle
- Power Shower Tested
- Compatible Side Panels on p191
- Alternative Tray Options on p208-223

Classic Nouveau Pivot Doors

Size	Ref.	Adjustability	Door Opening	Exc. VAT	Inc. VAT
700mm	QX6CN32PSC	655-695mm	473mm	£347.00	**£416.40**
760mm	QX6CN15PSC	715-755mm	573mm	£352.00	**£422.40**
800mm	QX6CN16PSC	755-795mm	573mm	£360.00	**£432.00**
900mm	QX6CN17PSC	855-895mm	673mm	£376.00	**£451.20**

Ascent 30mm Cast Stone Tray Options

Size	Exc. VAT	Inc. VAT
800 x 800mm	£224.00	**£268.80**
900 x 700mm	£242.00	**£290.40**
900 x 800mm	£254.00	**£304.80**
900 x 900mm	£249.00	**£298.80**

Classic Nouveau Bi-Fold Doors

Size	Ref.	Adjustability	Door Opening	Exc. VAT	Inc. VAT
760mm	QX6CN24PSC	715-755mm	515mm	£438.00	**£525.60**
800mm	QX6CN25PSC	755-795mm	555mm	£444.00	**£532.80**
900mm	QX6CN26PSC	855-895mm	655mm	£464.00	**£556.80**

Ascent 30mm Cast Stone Tray Options

Size	Exc. VAT	Inc. VAT
800 x 800mm	£224.00	**£268.80**
900 x 700mm	£242.00	**£290.40**
900 x 800mm	£254.00	**£304.80**
900 x 900mm	£249.00	**£298.80**

Classic Nouveau Sliding Door & Side Panels

Clearview All Classic Nouveau Enclosures come complete with Clearview Glass Protection

LIFETIME MANUFACTURERS GUARANTEE

Sliding Door with Side Panel

Sliding Door in a Recess Application

6mm Glass

HEIGHT 1900mm

REVERSIBLE

Clearview *Easy Clean Glass*

- Quick Release Rollers
- Internal & External Handle
- Power Shower Tested
- Compatible Side Panels Below
- Alternative Tray Options on p208-223

Classic Nouveau Sliding Door

Size	Ref.	Adjustability	Door Opening	Exc. VAT	Inc. VAT
1000mm	QX6CN09PSC	955-995mm	383mm	£424.00	**£508.80**
1100mm	QX6CN10PSC	1055-1095mm	433mm	£436.00	**£523.20**
1200mm	QX6CN11PSC	1155-1195mm	483mm	£447.00	**£536.40**
1400mm	QX6CN12PSC	1355-1395mm	583mm	£486.00	**£583.20**
1500mm	QX6CN28PSC	1455-1495mm	633mm	£505.00	**£606.00**
1600mm	QX6CN29PSC	1555-1595mm	683mm	£521.00	**£625.20**
1700mm	QX6CN30PSC	1655-1695mm	733mm	£570.00	**£684.00**

Side Panels

Size	Ref.	Adjustability	Door Opening	Exc. VAT	Inc. VAT
700mm	QX6CN27PSC	665-685mm	-	£224.00	**£268.80**
760mm	QX6CN21PSC	725-745mm	-	£229.00	**£274.80**
800mm	QX6CN22PSC	765-785mm	-	£234.00	**£280.80**
900mm	QX6CN23PSC	865-885mm	-	£249.00	**£298.80**

Ascent 30mm Cast Stone Tray Options

Size	Exc. VAT	Inc. VAT
1000 x 800mm	£265.00	**£318.00**
1000 x 900mm	£298.00	**£357.60**
1200 x 760mm	£265.00	**£318.00**
1200 x 800mm	£280.00	**£336.00**
1200 x 900mm	£305.00	**£366.00**
1400 x 800mm	£331.00	**£397.20**
1400 x 900mm	£356.00	**£427.20**
1600 x 800mm	£356.00	**£427.20**
1700 x 700mm	£381.00	**£457.20**
1700 x 800mm	£407.00	**£488.40**

Classic Nouveau 2-Door Quadrants

Classic Nouveau

LIFETIME MANUFACTURERS GUARANTEE

Clearview All Classic Nouveau Enclosures come complete with Clearview Glass Protection

2-Door Quadrant

2-Door Offset Quadrant
Shown on Right Hand Tray

6mm Glass

HEIGHT 1900mm

REVERSIBLE

Clearview *Easy Clean Glass*

- Quick Release Rollers
- Internal & External Handle
- Alternative Tray Options on p208-223
- Power Shower Tested

Classic Nouveau 2-Door Quadrant

Size	Ref.	Adjustability	Door Opening	Exc. VAT	Inc. VAT
800mm	QX6CN01PSC	770-790mm	401mm	£543.00	**£651.60**
900mm	QX6CN02PSC	870-890mm	531mm	£563.00	**£675.60**
1000mm	QX6CN03PSC	970-990mm	531mm	£622.00	**£746.40**

Ascent 30mm Cast Stone Tray Options

Size	Exc. VAT	Inc. VAT
800mm Quad	£214.00	**£256.80**
900mm Quad	£239.00	**£286.80**
1000mm Quad	£265.00	**£318.00**

Classic Nouveau 2-Door Offset Quadrant

Size	Ref.	Adjustability	Door Opening	Exc. VAT	Inc. VAT
900 x 760mm	QX6CN31PSC	730-750mm / 870-890mm	436mm	£594.00	**£712.80**
1000 x 800mm	QX6CN04PSC	770-790mm / 970-990mm	468mm	£629.00	**£754.80**
1200 x 800mm	QX6CN05PSC	770-790mm - 1170-1190mm	468mm	£669.00	**£802.80**
1200 x 900mm	QX6CN06PSC	870-890mm / 1170-1190mm	531mm	£681.00	**£817.20**

Size	Exc. VAT	Inc. VAT
1000 x 800mm Quad	£280.00	**£336.00**
1200 x 800mm Quad	£305.00	**£366.00**
1200 x 900mm Quad	£331.00	**£397.20**

NOTE: Please specify tray handing when ordering - LH or RH

Classic Nouveau

'D' Shaped Quadrant & Pentangle

Clearview All Classic Nouveau Enclosures come complete with Clearview Glass Protection

LIFETIME MANUFACTURERS GUARANTEE

6mm Glass

HEIGHT 1900mm

REVERSIBLE

Clearview Easy Clean Glass

- Internal & External Handle
- Power Shower Tested
- Quick Release Rollers
- 'D' Shaped Enclosure must be used with dedicated tray detailed
- 'D' Shaped Tray has a 90mm Waste Hole *(Waste Not Included)* and is NOT available as an Easyplumb option

'D' Shaped Enclosure

Product	Size	Ref.	Adjustability	Door Opening	Exc. VAT	Inc. VAT
'D' Shaped Quadrant Enclosure	900 x 765mm	QX6CN19SC	862-880mm / 745-750mm	565mm	£760.00	**£912.00**
Ascent 'D' Shaped 30mm Stone Tray	900 x 765mm	ASC/D900	-	-	£234.00	**£280.80**
Enclosure Combination Total					**£994.00**	**£1,192.80**

Classic Nouveau Pentangle Enclosure

Size	Ref.	Adjustability	Door Opening	Exc. VAT	Inc. VAT
900mm	QX6CN39PSC	870-890mm	537mm	£617.00	£740.40

Pentangle Tray Options

Product	Exc. VAT	Inc. VAT
Ascent 900mm Pentangle 30mm Stone Tray	£265.00	£318.00

Single Door Quadrant & Corner Entry

Classic Nouveau

LIFETIME MANUFACTURERS GUARANTEE

Clearview All Classic Nouveau Enclosures come complete with Clearview Glass Protection

Single Door Quadrant Enclosure & Tray

Corner Entry Enclosure

6mm Glass | HEIGHT 1900mm | REVERSIBLE | Clearview Easy Clean Glass

- Internal & External Handle
- Power Shower Tested
- Quick Release Rollers
- Must be used with dedicated tray detailed
- Tray has a 90mm Waste Hole *(Waste Not Included)* and is NOT available as an Easyplumb option

Classic Nouveau Single Door Quadrant Enclosure

Product	Size	Ref.	Adjustability	Door Opening	Exc. VAT	Inc. VAT
Single Door Quadrant Enclosure	900mm	QX6CN08PSC	865-885mm	570mm	£538.00	**£645.60**
QX 900mm Single Door Quad 40mm Tray	900mm	QX9C08TASTONE	-	-	£246.00	**£295.20**
Enclosure Combination Total					**£784.00**	**£940.80**

6mm Glass | HEIGHT 1900mm | REVERSIBLE | Clearview Easy Clean Glass

- Quick Release Rollers
- Internal & External Handle
- Alternative Tray Options on p208-223
- Power Shower Tested

Classic Nouveau Corner Entry Enclosure

Size	Ref.	Adjustability	Door Opening	Exc. VAT	Inc. VAT
760mm	QX6CN35PSC	730-750mm	359mm	£541.00	**£649.20**
800mm	QX6CN36PSC	770-790mm	387mm	£554.00	**£664.80**
900mm	QX6CN37PSC	870-890mm	458mm	£619.00	**£742.80**

Ascent 30mm Cast Stone Tray Options

Size	Exc. VAT	Inc. VAT
-	-	-
800 x 800mm	£224.00	**£268.80**
900 x 900mm	£249.00	**£298.80**

Classic Nouveau Showerwall

All Classic Nouveau Enclosures come complete with Clearview Glass Protection

1950mm HIGH

Black Framed Showerwall

Polished Silver Showerwall

6mm Glass

HEIGHT 1950mm

REVERSIBLE

Clearview *Easy Clean Glass*

- Clear Glass with a choice of Polished Silver or Matt Black Frame
- 800mm Showerwall is supplied with Bracing Bar for End Panel application only
- All other sizes are supplied with Wall Support Bar
- Power Shower Tested

Classic Nouveau Showerwall		Polished Silver			Matt Black		
Size	**Adjustability**	**Ref.**	**Exc. VAT**	**Inc. VAT**	**Ref.**	**Exc. VAT**	**Inc. VAT**
800mm	780-800mm	QX6CN40PSC	£280.00	**£336.00**	QX6CN44PSC	£280.00	**£336.00**
900mm	880-900mm	QX6CN41PSC	£292.00	**£350.40**	QX6CN45PSC	£292.00	**£350.40**
1000mm	980-1000mm	QX6CN42PSC	£292.00	**£350.40**	QX6CN46PSC	£292.00	**£350.40**
1200mm	1180-1200mm	QX6CN43PSC	£320.00	**£384.00**	N/A	-	-

Genesis Pivot & Bifold Doors

GENESIS

Clearview All Genesis Enclosures come complete with Clearview Glass Protection

6mm Glass

HEIGHT 1900mm

REVERSIBLE

Clearview *Easy Clean Glass*

- Internal & External Handle (Pivor Door Only)
- Compatible Side Panels on p197
- Alternative Tray Options on p208-223
- Power Shower Tested

Genesis Pivot Door

Size	Ref.	Adjustability	Door Opening	Exc. VAT	Inc. VAT
700mm	QX4PD0700	655-695mm	481mm	£283.00	£339.60
760mm	QX4PD0760	715-755mm	530mm	£290.00	£348.00
800mm	QX4PD0800	755-795mm	570mm	£295.00	£354.00
900mm	QX4PD0900	855-895mm	681mm	£312.00	£374.40

Genesis 40mm Tray Option

Size	Exc. VAT	Inc. VAT
700 x 700mm	£117.00	£140.40
760 x 760mm	£117.00	£140.40
800 x 800mm	£146.00	£175.20
900 x 900mm	£210.00	£252.00

Genesis Bi-fold Door

Size	Ref.	Adjustability	Door Opening	Exc. VAT	Inc. VAT
700mm	QX4BF0700	655-695mm	500mm	£394.00	£472.80
760mm	QX4BF0760	715-755mm	560mm	£400.00	£480.00
800mm	QX4BF0800	755-795mm	600mm	£406.00	£487.20
900mm	QX4BF0900	855-895mm	700mm	£419.00	£502.80

Genesis 40mm Tray Option

Size	Exc. VAT	Inc. VAT
700 x 700mm	£117.00	£140.40
760 x 760mm	£117.00	£140.40
800 x 800mm	£146.00	£175.20
900 x 900mm	£210.00	£252.00

Genesis Sliding Doors & Side Panels

All Genesis Enclosures come complete with Clearview Glass Protection

10 YEAR MANUFACTURERS GUARANTEE

Genesis Handle Detail

6mm Glass

HEIGHT 1900mm

REVERSIBLE

Clearview *Easy Clean Glass*

- Quick Release Rollers
- Internal & External Handle
- 6mm Glass Door, 4mm Glass Panels
- Power Shower Tested
- Compatible Side Panels Below
- Alternative Tray Options on p208-223

Genesis Sliding Door

Size	Ref.	Adjustability	Door Opening	Exc. VAT	Inc. VAT
1000mm	QX4SL1000	955-995mm	370mm	£347.00	£416.40
1200mm	QX4SL1200	1155-1195mm	470mm	£376.00	£451.20
1300mm	QX4SL1300	1255-1295mm	530mm	£384.00	£460.80
1400mm	QX4SL1400	1355-1395mm	570mm	£392.00	£470.40
1500mm	QX4SL1500	1455-1495mm	620mm	£402.00	£482.40

Genesis 40mm Tray Option

Size	Exc. VAT	Inc. VAT
1000 x 800mm	£270.00	£324.00
1200 x 900mm	£273.00	£327.60
1300 x 800mm	£401.00	£481.20
1400 x 900mm	£438.00	£525.60
1500 x 800mm	£471.00	£565.20

Genesis Side Panels

Size	Ref.	Adjustability	Door Opening	Exc. VAT	Inc. VAT
700mm	QX4SP0700	655-690mm	-	£196.00	£235.20
760mm	QX4SP0760	715-750mm	-	£203.00	£243.60
800mm	QX4SP0800	755-790mm	-	£203.00	£243.60
900mm	QX4SP0900	855-890mm	-	£211.00	£253.20

Genesis Quad & Offset Quad

GENESIS

10 YEAR MANUFACTURERS GUARANTEE

Clearview All Genesis Enclosures come complete with Clearview Glass Protection

2-Door Quadrant

2-Door Offset Quadrant - Pictured on Left Hand Tray

6mm Glass

HEIGHT 1900mm

REVERSIBLE

Clearview *Easy Clean Glass*

- Internal & External Handle
- 6mm Glass Door, 4mm Glass Panels
- Quick Release Rollers
- Power Shower Tested
- Alternative Tray Options on p208-223

Genesis 2-Door Quadrant

Size	Ref.	Adjustability	Door Opening	Exc. VAT	Inc. VAT
800mm	QXGQU8080	775-795mm	415mm	£375.00	£450.00
900mm	QXGQU9090	875-895mm	515mm	£397.00	£476.40

Genesis 40mm Tray Option

Size	Exc. VAT	Inc. VAT
800mm Quad	£210.00	£252.00
900mm Quad	£228.00	£273.60

Genesis 2-Door Offset Quadrant

Size	Ref.	Adjustability	Door Opening	Exc. VAT	Inc. VAT
900 x 760mm	QXGQU9760	735-755mm / 875-895mm	429mm	£382.00	£458.40
1000 x 800mm	QXGQU8010	775-795mm / 975-995mm	466mm	£399.00	£478.80
1200 x 800mm	QXGQU8012	775-795mm / 1175-1195mm	466mm	£432.00	£518.40
1200 x 900mm	QXGQU9012	875-895mm / 1175-1195mm	515mm	£472.00	£566.40

Genesis 40mm Tray Option

Size	Exc. VAT	Inc. VAT
900 x 760mm Quad	£255.00	£306.00
1000 x 800mm Quad	£346.00	£415.20
1200 x 800mm Quad	£344.00	£412.80
1200 x 900mm Quad	£347.00	£416.40

GENESIS 1-Door Quad & 'D' Shaped Enclosure

Clearview All Genesis Enclosures come complete with Clearview Glass Protection

10 YEAR MANUFACTURERS GUARANTEE

6mm Glass | HEIGHT 1900mm | REVERSIBLE | Clearview Easy Clean Glass

- Internal & External Handle
- 6mm Glass Door, 4mm Glass Panels
- Quick Release Rollers
- Power Shower Tested
- Alternative Tray Options on p208-223

Genesis Single Door Quadrant can be used with standard Quadrant Trays

Genesis Single Door Quadrant

Size	Ref.	Adjustability	Door Opening	Exc. VAT	Inc. VAT
800mm	QXGQU1DR80	775-795mm	411mm	£387.00	£464.40
900mm	QXGQU1DR90	875-895mm	439mm	£419.00	£502.80

Genesis 40mm Cast Stone Tray Options

Size	Exc. VAT	Inc. VAT
800mm Quad	£210.00	£252.00
900mm Quad	£228.00	£273.60

6mm Glass | HEIGHT 1900mm | REVERSIBLE | Clearview Easy Clean Glass

- Quick Release Rollers
- Internal & External Handle
- 6mm Glass Door, 4mm Glass Panels
- Power Shower Tested
- Must be used with dedicated tray detailed
- Tray has a 90mm Waste Hole *(Waste Not Included)* and is NOT available as an Easyplumb option

Genesis 'D' Shaped Enclosure

Product	Size	Ref.	Adjustability	Door Opening	Exc. VAT	Inc. VAT
'D' Shaped Quadrant Enclosure	985 x 844mm	QXGDS993	825-835mm	586mm	£621.00	£745.80
Ascent 'D' Shaped 30mm Stone Tray	985 x 844mm	ASC/D985	-	-	£244.00	£292.80
Enclosure Combination Total					**£865.00**	**£1,038.00**

Genesis Corner Entry Enclosure

GENESIS

10 YEAR MANUFACTURERS GUARANTEE

Clearview All Genesis Enclosures come complete with Clearview Glass Protection

Genesis Handle Detail

Genesis Profile Detail

6mm Glass

HEIGHT 1900mm

REVERSIBLE

Clearview *Easy Clean Glass*

- Internal & External Handle
- 6mm Glass Door, 4mm Glass Panels
- Quick Release Rollers
- Power Shower Tested
- Alternative Tray Options on p208-223

Genesis Corner Entry Enclosure

Size	Ref.	Adjustability	Door Opening	Exc. VAT	Inc. VAT
760mm	QXGCE0760	735-755mm	391mm	£379.00	£454.80
800mm	QXGCE0800	775-795mm	419mm	£389.00	£466.80
900mm	QXGCE0900	875-895mm	490mm	£412.00	£494.40

Genesis 40mm Cast Stone Tray Options

Size	Exc. VAT	Inc. VAT
760 x 760mm	£117.00	£140.40
800 x 800mm	£146.00	£175.20
900 x 900mm	£210.00	£252.00

Genesis Smoked Showerwall

Clearview All Genesis Enclosures come complete with Clearview Glass Protection

1950mm HIGH

10 YEAR MANUFACTURERS GUARANTEE

Black/Smoked Showerwall

Black/Smoked Showerwall
Pictured with Flipper Panel

8mm Glass

HEIGHT 1950mm

REVERSIBLE

Clearview *Easy Clean Glass*

- 800-1200mm Smoked Glass Panels are supplied with a Horizontal Support Bar
- 500mm Smoked Glass Panel excludes Horizontal Support Bar
- Can be used in conjunction with the 300mm Flipper Panel - priced below
- Black T-Piece to connect Support Bars available to purchase seprately - priced below

Genesis Black/Smoked Glass Showerwall

Size	Ref.	Adjustability	Exc. VAT	Inc. VAT
500mm	QXGSW500BB	475-495mm	£190.00	£228.20
800mm	QXGSW800BB	775-795mm	£332.00	£398.40
900mm	QXGSW900BB	875-895mm	£356.00	£427.20
1000mm	QXGSW1000BB	975-995mm	£379.00	£454.80
1200mm	QXGSW1200BB	1175-1195mm	£432.00	£518.40

Also Available:	Ref.	Exc. VAT	Inc. VAT
T-Piece Connector - Black	QXGTPBB	£20.00	£24.00

300mm Flipper Panel Option

Can be retrospectively fitted to any
1950mm High x 8mm Thick exposed glass edge

Smoked Glass	£195.00 Exc. VAT
Ref: QXGFP300B	£234.00 Inc. VAT

Genesis Brass Showerwall

All Genesis Enclosures come complete with Clearview Glass Protection

1950mm HIGH

8mm Glass

HEIGHT 1950mm

REVERSIBLE

Clearview *Easy Clean Glass*

- All Panels are supplied with a Horizontal Support Bar
- 800mm Panel can be used as Front or End Panel
- Brushed Brass T-Piece to connect Support Bars available to purchase seprately - priced below

Genesis Brushed Brass Framed Showerwall

Size	Ref.	Adjustability	Exc. VAT	Inc. VAT
800mm	QXGSW800BRS	775-795mm	£409.00	£490.80
1000mm	QXGSW1000BRS	975-995mm	£462.00	£554.40
1200mm	QXGSW1200BRS	1175-1195mm	£490.00	£588.00

Also Available:	Ref.	Exc. VAT	Inc. VAT
T-Piece Connector - Brushed Brass	QXGTPBRS	£22.00	£26.40

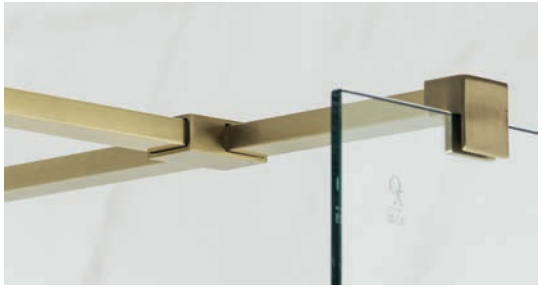

Genesis Showerwall

All Genesis Enclosures come complete with Clearview Glass Protection

1950mm HIGH

Standard Showerwall

8mm Glass | HEIGHT 1950mm | REVERSIBLE | Clearview Easy Clean Glass

- 700-1200mm Panels are supplied with a Horizontal Support Bar
- 500mm Panel excludes Horizontal Support Bar
- Can be used in conjunction with the 300mm Flipper Panel - priced below
- Chrome T-Piece to connect Support Bars & Corner Support Bars available to purchase seprately - priced below

Genesis Standard Showerwall

Size	Ref.	Adjustability	Exc. VAT	Inc. VAT
500mm	QXGSW500	475-495mm	£154.00	£184.80
700mm	QXGSW700	675-695mm	£244.00	£292.80
760mm	QXGSW760	735-755mm	£255.00	£306.00
800mm	QXGSW800	775-795mm	£262.00	£314.40
900mm	QXGSW900	875-895mm	£278.00	£333.60
1000mm	QXGSW1000	975-995mm	£294.00	£352.80
1200mm	QXGSW1200	1175-1195mm	£324.00	£388.80

Also Available:	Ref.	Exc. VAT	Inc. VAT
T-Piece Connector - Chrome	QXGTPS	£19.00	£22.80
Corner Support Bar - Chrome	QXGSWCORSU	£46.00	£55.20
Horzontal Support Bar - Chrome	ASC10SB	£82.00	£98.40

300mm Flipper Panel Option

Can be retrospectively fitted to any 1950mm High x 8mm Thick exposed glass edge

Clear Glass £164.00 Exc. VAT
Ref: QXGFP300S **£196.80** Inc. VAT

Corner Bar

Genesis Curved Showerwall

GENESIS

10 YEAR MANUFACTURERS GUARANTEE

Suitable for a wide selection of Shower Tray Styles & Sizes - including Wetroom Application

1950mm HIGH

Genesis Curved Showerwall on a 1400 x 900mm Tray
Combination Priced Below - Excluding Shower Kit

8mm Glass

HEIGHT 1950mm

REVERSIBLE

Clearview *Easy Clean Glass*

- Supplied with a curved support arm, suitable for widths up to 900mm - Extended support arm for widths up to 1000mm available separately.

Extended Curved Support Arm Ref: QXGSWSUPP £30.00 Exc. VAT
£36.00 Inc. VAT

Genesis Curved Showerwall	Size	Ref.	Adjustability	Exc. VAT	Inc. VAT
Curved Showerwall Only	850mm	QXGSW850C	822-842mm	£412.00	£494.40

Combination Above	Size	Ref.	Adjustability	Exc. VAT	Inc. VAT
Genesis Curved Showerwall	850mm	QXGSW850C	20mm in Profile	£412.00	£494.40
Genesis 500 Showerwall	500mm	QXGSW500	-	£154.00	£184.80
Genesis Corner Support Arm	332mm Arc Length	QXGSWCORSUP	-	£46.00	£55.20
Ascent Premier 30mm Tray*	1400 x 900mm	ASC14/9	-	£356.00	£427.20
Combination Total				**£968.00**	**£1,161.60**

**Not pictured above*

Genesis Walk-In Enclosure

All Genesis Enclosures come complete with Clearview Glass Protection

1900mm HIGH

Walk-In Enclosure - Pictured on Right Hand Tray

Walk-In Tray Detail (Left Hand)

6mm Glass

HEIGHT 1900mm

REVERSIBLE

Clearview *Easy Clean Glass*

- Enclosure is Reversible - Tray is Handed (LH or RH). *Please specify tray handing when placing your order.*
- Power Shower Tested
- Must be used with dedicated tray detailed
- Tray has a 90mm Waste Hole *(Waste Not Included)* and is NOT available as an Easyplumb option

Product	Size	Ref.	Adjustability	Door Opening	Exc. VAT	Inc. VAT
Walk-In Enclosure	1350 x 900mm	QXGWI01350	750-760mm / 765-775mm	-	£409.00	£490.80
QX Walk-In 40mm Stone Tray - LH	1350 x 900mm	QX9C18TASTONE/L	-	-	£362.00	£434.40
Enclosure Combination Total					**£771.00**	**£925.20**

Product	Size	Ref.	Adjustability	Door Opening	Exc. VAT	Inc. VAT
Walk-In Enclosure	1350 x 900mm	QXGWI01350	750-760mm / 765-775mm	-	£409.00	£490.80
QX Walk-In 40mm Stone Tray - RH	1350 x 900mm	QX9C18TASTONE/R	-	-	£362.00	£434.40
Enclosure Combination Total					**£771.00**	**£925.20**

Alpha Pivot & Sliding Doors

Pivot & Sliding Door Options

Pivot Door with Side Panel

Sliding Door with Side Panel

6mm Glass

HEIGHT 1900mm

REVERSIBLE

- External Handle & Internal Knob
- Compatible with Side Panels Below or can be used in a recessed application
- Sliding Door has Quick Release Rollers
- Alternative Tray Options on p208-223

Alpha Pivot Doors

Size	Ref.	Adjustability	Door Opening	Exc. VAT	Inc. VAT
700mm	QXA501PSC	655-695mm	440mm	£220.00	£264.00
760mm	QXA502PSC	715-755mm	486mm	£226.00	£271.20
800mm	QXA503PSC	755-795mm	476mm	£231.00	£277.20
900mm	QXA504PSC	855-895mm	576mm	£242.00	£290.40

Genesis 40mm Tray Option

Size	Exc. VAT	Inc. VAT
700 x 700mm	£117.00	£140.40
760 x 760mm	£117.00	£140.40
800 x 800mm	£146.00	£175.20
900 x 900mm	£210.00	£252.00

Alpha Sliding Doors

Size	Ref.	Adjustability	Door Opening	Exc. VAT	Inc. VAT
1000mm	QXA509PSC	955-995mm	380mm	£255.00	£306.00
1200mm	QXA510PSC	1145-1195mm	480mm	£280.00	£336.00

Genesis 40mm Tray Option

Size	Exc. VAT	Inc. VAT
1000 x 800mm	£270.00	£324.00
1200 x 800mm	£257.00	£308.40

Alpha Side Panels

Size	Ref.	Adjustability	Door Opening	Exc. VAT	Inc. VAT
700mm	QXA505PSC	665-685mm	-	£140.00	£168.00
760mm	QXA506PSC	725-745mm	-	£145.00	£174.00
800mm	QXA507PSC	765-785mm	-	£149.00	£178.80
900mm	QXA508PSC	865-885mm	-	£159.00	£190.80

Alpha Quads & Walk-In Panels

Quadrants, Offset Quadrants and Walk-In Shower Panels

Quadrant Enclosure

1200mm Walk-In Panel shown with 800mm Walk-In used as an End Panel with Chrome T-Piece and Horizontal Support Bar on a 1700 x 800mm Shower Tray - Giving a 500mm Opening

6mm Glass

HEIGHT 1900mm

REVERSIBLE

- Quadrants have an External Handle & Internal Knob and Quick Release Rollers
- 800mm & 900mm Walk-In Panels can be installed as End Panels and include a chrome T-Piece to connect to the Horizontal Support Bar
- Alternative Tray Options on p208-223

Alpha Quadrant Enclosures

Size	Ref.	Adjustability	Door Opening	Exc. VAT	Inc. VAT
800mm	QXA511PSC	770-790mm	385mm	£338.00	£405.60
900mm	QXA512PSC	870-890mm	525mm	£354.00	£424.80

Genesis 40mm Tray Option

Size	Exc. VAT	Inc. VAT
800mm Quad	£210.00	£252.00
900mm Quad	£228.00	£273.60

Alpha Offset Quadrant Enclosures

Size	Ref.	Adjustability	Door Opening	Exc. VAT	Inc. VAT
1000 x 800mm	QXA513PSC	770-790mm/970-990mm	465mm	£361.00	£433.20
1200 x 800mm	QXA514PSC	770-790mm/1170-1190mm	465mm	£390.00	£468.00

Genesis 40mm Tray Option

Size	Exc. VAT	Inc. VAT
1000 x 800mm Q	£346.00	£415.20
1200 x 800mm Q	£344.00	£412.80

HEIGHT 1950mm

Alpha Walk-In Panels - 1950mm High

Size	Ref.	Adjustability	Door Opening	Exc. VAT	Inc. VAT
800mm	QXA515PSC	775-795mm	-	£189.00	£226.80
900mm	QXA516PSC	875-895mm	-	£197.00	£236.40
1000mm	QXA517PSC	975-995mm	-	£207.00	£248.40
1200mm	QXA518PSC	1175-1195mm	-	£231.00	£277.20

Ascent Premier 35mm Stone Trays

- 35mm Stone Tray
- Textured Surface for improved Slip Resistance
- 3 Colour Options
- 5 sizes available
- Supplied with Integrated Linear Waste Cover
- Requires 90mm Trap Fitting (Not Included)

Ascent 90mm Shower Trap & Removable Waste

Ref: TAST1CP-K	Finish: Chrome
£13.00 Exc. VAT	**£15.60 Inc. VAT**

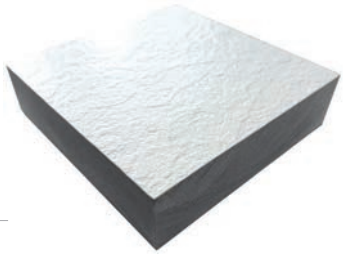

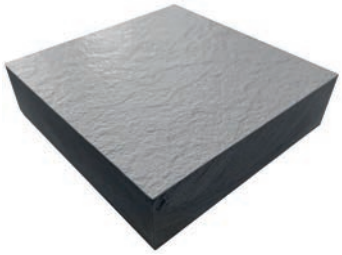

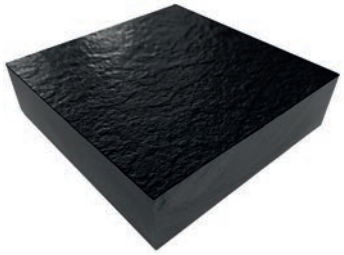

Size	Ref.	White Stone Exc. VAT	White Stone Inc. VAT	Grey Stone Exc. VAT	Grey Stone Inc. VAT	Black Stone Exc. VAT	Black Stone Inc. VAT
1000 x 800mm	LST1x8	£419.00	**£502.80**	£419.00	**£502.80**	£419.00	**£502.80**
1200 x 800mm	LST12x8	£473.00	**£567.60**	£473.00	**£567.60**	£473.00	**£567.60**
1400 x 800mm	LST14x8	£530.00	**£636.00**	£530.00	**£636.00**	£530.00	**£636.00**
1400 x 900mm	LST14x9	£557.00	**£668.40**	£557.00	**£668.40**	£557.00	**£668.40**
1700 x 800mm	LST17x8	£635.00	**£762.00**	£635.00	**£762.00**	£635.00	**£762.00**

NOTE: Actual tray colours/finishes may vary slightly due to the limitations and many variations in print reproduction.

Ascent Premier 30mm Trays

Crisp lines and modern contours make this tray an attractive addition to any enclosure. With the hidden waste lending itself to a very minimalist design, it works perfectly with our range of Ascent Premier Enclosures

- 30mm Stone Resin Tray with Gel Coat Finish
- Unique Slip-Resistance Surface
- Optional Leg & Panel Kit for Easy-Plumb Installation
- Hidden Waste Design
- Available in 29 size options
- Requires 90mm Waste Fitting (Not Included)
- Panel Height - 100mm
- 10 Year Manufacturers Guarantee

Ascent Premier 30mm Trays

10 YEAR MANUFACTURERS GUARANTEE

ascent PREMIER

Square Tray Sizes:

Size	Ref.	Exc. VAT	Inc. VAT
760 x 760mm	ASC760	£214.00	**£256.80**
800 x 800mm	ASC800	£224.00	**£268.80**
900 x 900mm	ASC900	£249.00	**£298.80**
1000 x 1000mm	ASC1000	£280.00	**£336.00**

Ascent Square Tray

Rectangular Tray Sizes:

Size	Ref.	Exc. VAT	Inc. VAT
900 x 700mm	ASC9/7	£242.00	**£290.40**
900 x 800mm	ASC9/8	£254.00	**£304.80**
1000 x 700mm	ASC10/7	£242.00	**£290.40**
1000 x 800mm	ASC10/8	£265.00	**£318.00**
1000 x 900mm	ASC10/9	£298.00	**£357.60**
1100 x 800mm	ASC11/8	£272.00	**£326.40**
1200 x 700mm	ASC12/7	£254.00	**£304.80**
1200 x 760mm	ASC12/76	£265.00	**£318.00**
1200 x 800mm	ASC12/8	£280.00	**£336.00**
1200 x 900mm	ASC12/9	£305.00	**£366.00**
1400 x 760mm	ASC14/76	£315.00	**£378.00**
1400 x 800mm	ASC14/8	£331.00	**£397.20**
1400 x 900mm	ASC14/9	£356.00	**£427.20**
1600 x 700mm	ASC16/7	£331.00	**£397.20**
1600 x 800mm	ASC16/8	£356.00	**£427.20**
1700 x 700mm	ASC17/7	£381.00	**£457.20**
1700 x 800mm	ASC17/8	£407.00	**£488.40**

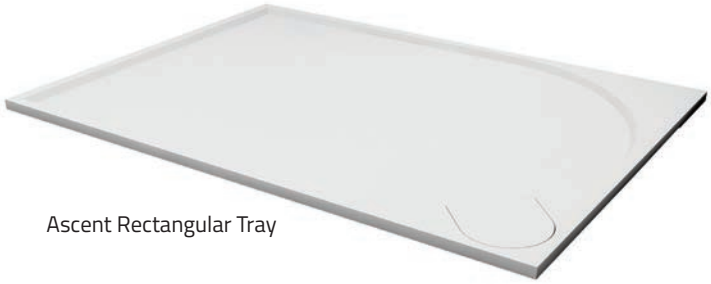

Ascent Rectangular Tray

Quadrant Tray Size

Size	Ref.	Exc. VAT	Inc. VAT
800mm Quad	ASC800Q	£214.00	**£256.80**
900mm Quad	ASC900Q	£239.00	**£286.80**
1000mm Quad	ASC1000Q	£265.00	**£318.00**
1000 x 800mm Quad LH or RH	ASC1/8Q	£280.00	**£336.00**
1200 x 800mm Quad LH or RH	ASC12/8Q	£305.00	**£366.00**
1200 x 900mm Quad LH or RH	ASC12/9Q	£331.00	**£397.20**

Ascent Quadrant Tray

Ascent Offset Quadrant Trays

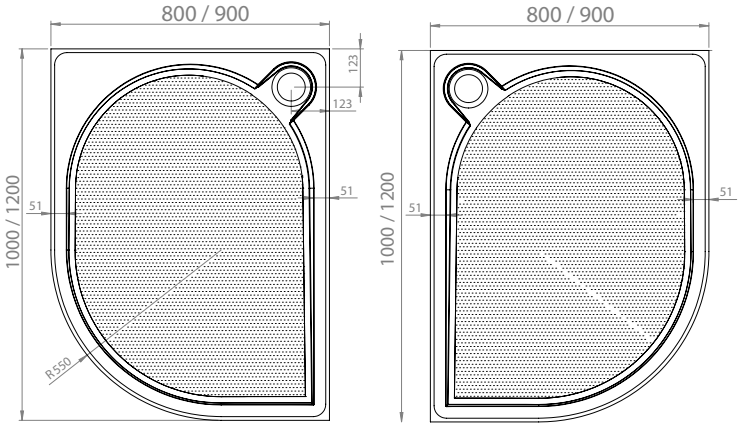

Right Hand Left Hand

Pentangle Tray Size

Size	Ref.	Exc. VAT	Inc. VAT
800mm Pentangle	ASC8P	£265.00	**£318.00**
900mm Pentangle	ASC9P	£265.00	**£318.00**

Panel Kit Options

Kit Type	Ref.	Exc. VAT	Inc. VAT
Rectangular Tray Kit	ASCPANREC	£128.00	**£153.60**
Large Rectangular Kit *For trays 1800mm+*	ASCPANLRG	£152.00	**£182.40**
Square Tray Kit	ASCPANSQ	£112.00	**£134.40**
Quadrant & Offset Quadrant Tray Kit	ASCPANQ	£122.00	**£146.40**

Ascent 90mm Shower Trap & Removable Waste

Ref: TAST1CP-K

Finish: Chrome

£13.00 Exc. VAT

£15.60 Inc. VAT

QX 90mm Shower Trap & Removable Waste

Ref: TAST2BL-K

Finish: Black

£21.00 Exc. VAT

£25.20 Inc. VAT

QX 90mm Shower Trap & Removable Waste

Ref: TAST4BBS-K

Finish: Brushed Brass

£29.00 Exc. VAT

£34.80 Inc. VAT

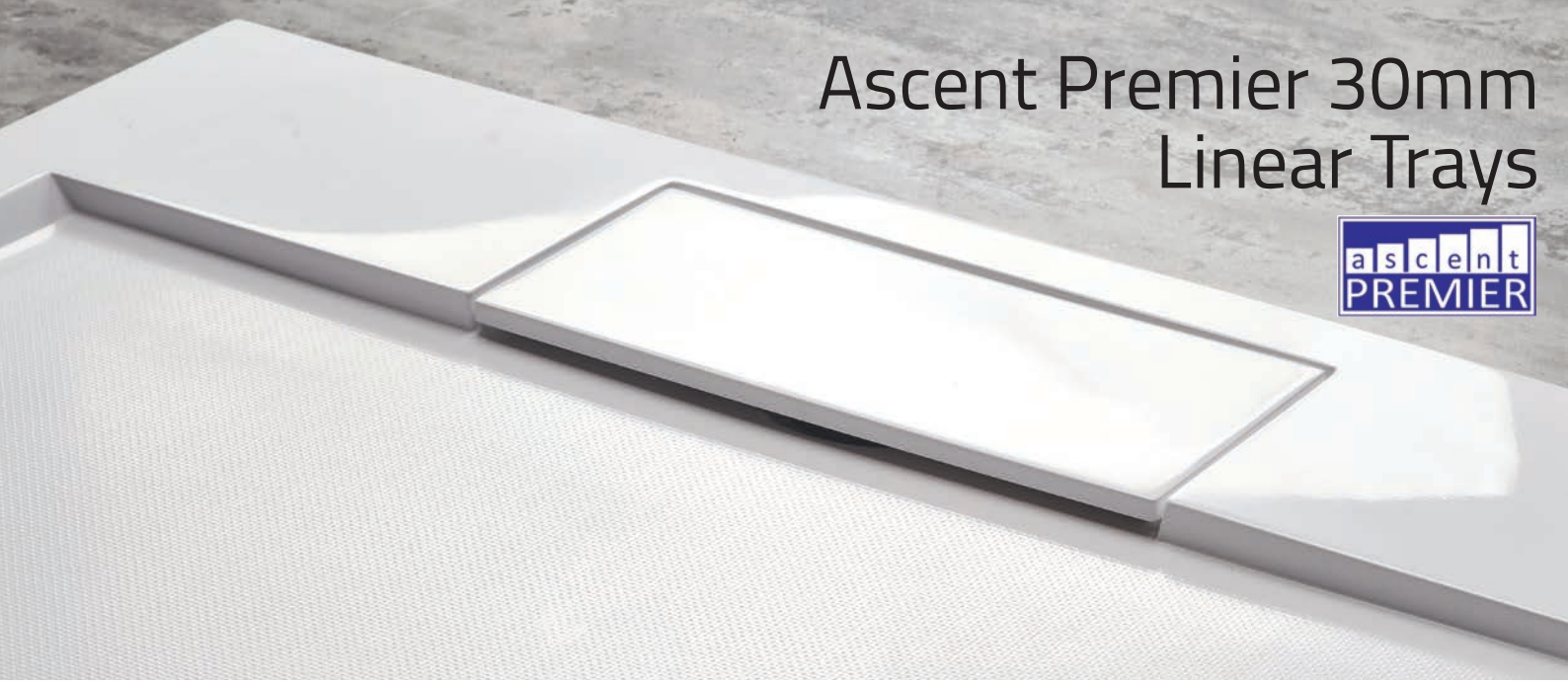

Ascent Premier 30mm Linear Trays

- 30mm Stone Resin Trays with Gel Coat Finish
- Unique Slip-Resistance Surface
- Hidden Linear Waste Design (300mm)
- The waste is positioned either along the short end of the tray, or in the centre of the long edge *(detailed below)*
- Available in 9 size options
- Optional Leg & Panel Kit for Easy-Plumb Installation
- Panel Height - 100mm
- Requires 90mm Waste Fitting (Not Included)
- 10 Year Manufacturers Guarantee

Square Tray

Size	Ref.	Exc. VAT	Inc. VAT
900 x 900mm	LIN9/9	£368.00	**£441.60**

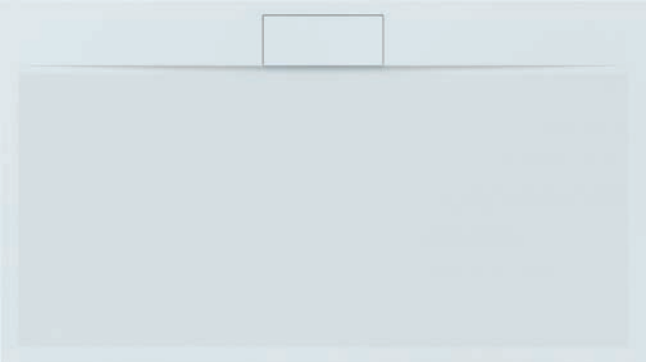

Centre Waste Position

Size	Ref.	Exc. VAT	Inc. VAT
1300 x 800mm	LIN13/8	£437.00	**£524.40**
1500 x 800mm	LIN15/8	£505.00	**£606.00**
1500 x 900mm	LIN15/9	£539.00	**£646.80**
1600 x 900mm	LIN16/9	£564.00	**£676.80**
1700 x 900mm	LIN17/9	£590.00	**£708.00**
1800 x 800mm	LIN18/8	£568.00	**£681.60**

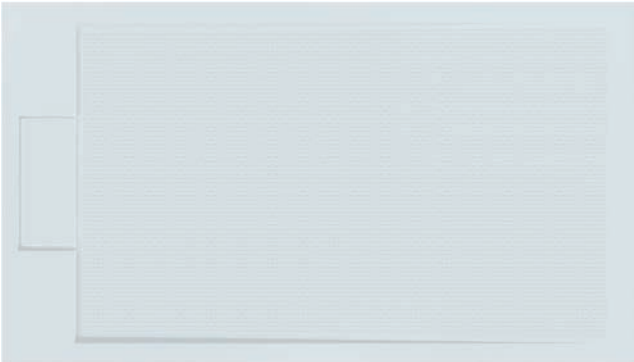

End Waste Position

Size	Ref.	Exc. VAT	Inc. VAT
1000 x 760mm	LIN1/760	£346.00	**£415.20**
1100 x 900mm	LIN11/9	£431.00	**£517.20**

Ascent 90mm Shower Trap & Removable Waste

Ref: TAST1CP-K

Finish: Chrome

£13.00 Exc. VAT

£15.60 Inc. VAT

Kit Type	Ref.	Exc. VAT	Inc. VAT
Rectangular Tray Kit	ASCPANREC	£128.00	**£153.60**
Large Rectangular Kit *For trays 1800mm+*	ASCPANLRG	£152.00	**£182.40**
Square Tray Kit	ASCPANSQ	£112.00	**£134.40**
Quadrant & Offset Quadrant Tray Kit	ASCPANQ	£122.00	**£146.40**

GENESIS ANTI-SLIP

- 40mm Stone Resin Tray
- Unique Slip-Resistant Surface*
- Optional Leg & Panel Kit for Easy-Plumb Installation
- 10 Year Manufacturers Guarantee
- Available in 32 size options
- Requires 90mm Waste Fitting (Not Included)
- Panel Height - 100mm

* This tray has a slip resistant surface which has passed tests with a B rating at an independent testing house. This however does not completely prevent slips or trips within the tray, which will become wet during normal use, and should be used with necessary caution.

Genesis 40mm Anti-Slip Trays

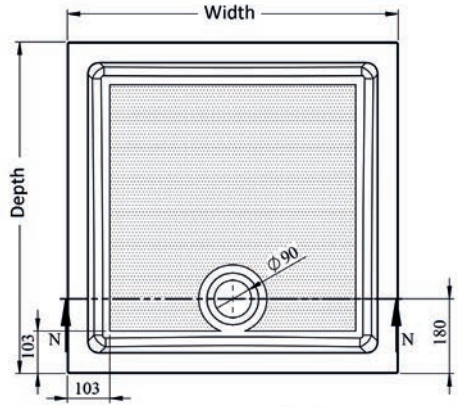

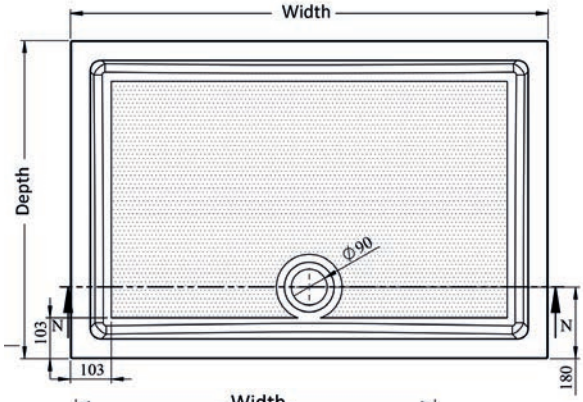

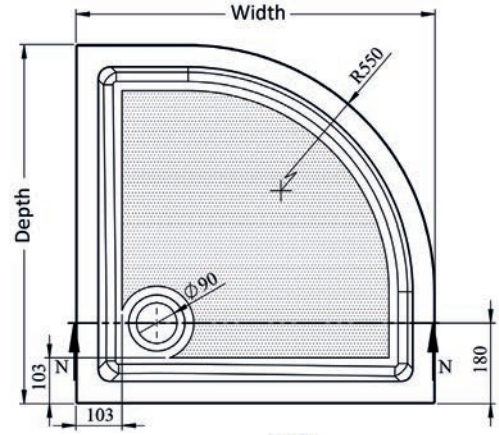

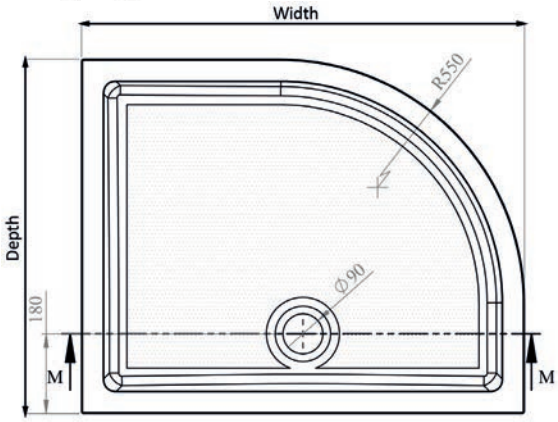

Square Tray Sizes:

Size	Ref.	Exc. VAT	Inc. VAT
700 x 700mm	AS700	£108.00	£129.60
760 x 760mm	AS760	£108.00	£129.60
800 x 800mm	AS800	£123.00	£147.60
900 x 900mm	AS900	£177.00	£212.40

Rectangular Tray Sizes:

Size	Ref.	Exc. VAT	Inc. VAT
800 x 700mm	AS8/7	£147.00	£176.40
900 x 700mm	AS9/7	£171.00	£205.20
900 x 760mm	AS9/76	£174.00	£208.80
900 x 800mm	AS9/8	£170.00	£204.00
1000 x 700mm	AS1/7	£185.00	£222.00
1000 x 800mm	AS1/8	£227.00	£272.40
1100 x 800mm	AS11/8	£232.00	£278.40
1200 x 700mm	AS12/7	£210.00	£252.00
1200 x 760mm	AS12/76	£210.00	£252.00
1200 x 800mm	AS12/8	£216.00	£259.20
1200 x 900mm	AS12/9	£229.00	£274.80
1300 x 800mm	AS13/8	£340.00	£408.00
1400 x 700mm	AS14/7	£340.00	£408.00
1400 x 800mm	AS14/8	£348.00	£417.60
1400 x 900mm	AS14/9	£369.00	£442.80
1500 x 800mm	AS15/8	£396.00	£475.20
1500 x 900mm	AS15/9	£396.00	£475.20
1600 x 700mm	AS16/7	£392.00	£470.40
1600 x 800mm	AS16/8	£400.00	£480.00
1600 x 900mm	AS16/9	£415.00	£498.00
1700 x 700mm	AS17/7	£436.00	£523.20
1700 x 760mm	AS17/76	£436.00	£523.20
1700 x 800mm	AS17/8	£445.00	£534.00
1700 x 900mm	AS17/9	£450.00	£540.00
1800 x 800mm	AS18/8	£492.00	£590.40

Quadrant Tray Size

Size	Ref.	Exc. VAT	Inc. VAT
800mm Quad	AS8Q	£177.00	£212.40
900mm Quad	AS9Q	£191.00	£229.20
1000 x 800mm Quad LH or RH	AS1/8Q	£292.00	£350.40

Panel Kit Options

Kit Type	Ref.	Exc. VAT	Inc. VAT
Rectangular Tray Kit	ASCPANREC	£128.00	£153.60
Large Rectangular Kit *For trays 1800mm+*	ASCPANLRG	£152.00	£182.40
Square Tray Kit	ASCPANSQ	£112.00	£134.40
Quadrant & Offset Quadrant Tray Kit	ASCPANQ	£122.00	£146.40

Genesis 40mm Trays

Low Profile, Minimalist, Modern Look, 90mm Waste Hole

Leg & Panel Kit for a Quadrant Shower Tray

- 40mm Stone Resin, Acrylic Capped Tray
- Optional Leg & Panel Kit for Easy-Plumb Installation
- 5 Year Manufacturers Guarantee
- Available in 43 size options
- Requires 90mm Waste Fitting (Not Included)
- Height Including Panel - 135mm

Ascent 90mm Shower Trap & Removable Waste
Ref: TAST1CP-K Finish: Chrome
£13.00 Exc. VAT **£15.60 Inc. VAT**

QX 90mm Shower Trap & Removable Waste
Ref: TAST2BL-K Finish: Black
£21.00 Exc. VAT **£25.20 Inc. VAT**

QX 90mm Shower Trap & Removable Waste
Ref: TAST4BBS-K Finish: Brushed Brass
£29.00 Exc. VAT **£34.80 Inc. VAT**

QX 80mm Cast Stone Trays

- 80mm Stone Resin, ABS Acrylic Capped Tray
- Optional Leg & Panel Kit for Easy-Plumb Installation
- 5 Year Manufacturers Guarantee
- Available in 33 size options
- Requires 50mm Waste Fitting (Not Included)
- Height Including Panel - 175mm

50mm Shower Trap (90mm Height) with Dome
Ref: ZB36310DB Finish: Chrome
£15.00 Exc. VAT **£18.00 Inc. VAT**
Flow Rate: 36 L/Min

50mm Shower Trap (90mm Height) with Grid
Ref: ZB36320DB Finish: Chrome
£15.00 Exc. VAT **£18.00 Inc. VAT**
Flow Rate: 36 L/Min

Genesis 40mm Trays

40mm Composite Stone Designer Trays

5 YEAR MANUFACTURERS GUARANTEE

Square Tray Sizes:

Size	Ref.	Exc. VAT	Inc. VAT
700 x 700mm	GEN700	£117.00	£140.40
760 x 760mm	GEN760	£117.00	£140.40
800 x 800mm	GEN800	£146.00	£175.20
900 x 900mm	GEN900	£210.00	£252.00
1000 x 1000mm	GEN1000	£290.00	£348.00

Rectangular Tray Sizes:

Size	Ref.	Exc. VAT	Inc. VAT
800 x 700mm	GEN8/7	£146.00	£175.20
900 x 700mm	GEN9/7	£201.00	£241.20
900 x 760mm	GEN9/76	£189.00	£226.80
900 x 800mm	GEN9/8	£202.00	£242.40
1000 x 700mm	GEN1/7	£220.00	£264.00
1000 x 760mm	GEN1/76	£224.00	£268.80
1000 x 800mm	GEN1/8	£270.00	£324.00
1000 x 900mm	GEN1/9	£270.00	£324.00
1100 x 760mm	GEN11/76	£275.00	£330.00
1100 x 800mm	GEN11/8	£277.00	£332.40
1100 x 900mm	GEN11/9	£277.00	£332.40
1200 x 700mm	GEN12/7	£251.00	£301.20
1200 x 760mm	GEN12/76	£251.00	£301.20
1200 x 800mm	GEN12/8	£257.00	£308.40
1200 x 900mm	GEN12/9	£273.00	£327.60
1300 x 800mm	GEN13/8	£401.00	£481.20
1400 x 700mm	GEN14/7	£401.00	£481.20
1400 x 800mm	GEN14/8	£414.00	£496.80
1400 x 900mm	GEN14/9	£438.00	£525.60
1500 x 700mm	GEN15/7	£443.00	£531.60
1500 x 760mm	GEN15/76	£441.00	£529.20
1500 x 800mm	GEN15/8	£471.00	£565.20
1500 x 900mm	GEN15/9	£476.00	£571.20
1600 x 700mm	GEN16/7	£466.00	£559.20
1600 x 760mm	GEN16/76	£446.00	£535.20
1600 x 800mm	GEN16/8	£476.00	£571.20
1600 x 900mm	GEN16/9	£493.00	£591.60
1700 x 700mm	GEN17/7	£520.00	£624.00
1700 x 760mm	GEN17/76	£520.00	£624.00
1700 x 800mm	GEN17/8	£530.00	£636.00
1700 x 900mm	GEN17/9	£535.00	£642.00

Quadrant Tray Size

Size	Ref.	Exc. VAT	Inc. VAT
800mm Quad	GEN8Q	£210.00	£252.00
900mm Quad	GEN9Q	£228.00	£273.60
1000mm Quad	GEN10Q	£395.00	£474.00
900 x 760mm Quad LH or RH	GEN9/76Q	£255.00	£306.00
1000 x 800mm Quad LH or RH	GEN1/8Q	£346.00	£415.20
1200 x 800mm Quad LH or RH	GEN12/8Q	£344.00	£412.80
1200 x 900mm Quad LH or RH	GEN12/9Q	£347.00	£416.40

Panel Kit Options

Kit Type	Ref.	Exc. VAT	Inc. VAT
Rectangular Tray Kit	GENPANREC	£113.00	£135.60
Square Tray Kit	GENPANSQ	£113.00	£135.60
Quadrant Tray Kit	GENPANQ	£113.00	£135.60
Offset Quadrant Tray Kit	GENPANOQ	£113.00	£135.60

Genesis Square Tray

Genesis Rectangular Tray

Genesis Quadrant Tray

Ascent 90mm Shower Trap & Removable Waste
Ref: TAST1CP-K Finish: Chrome
£13.00 Exc. VAT **£15.60 Inc. VAT**

QX 90mm Shower Trap & Removable Waste
Ref: TAST2BL-K Finish: Black
£21.00 Exc. VAT **£25.20 Inc. VAT**

QX 90mm Shower Trap & Removable Waste
Ref: TAST4BBS-K Finish: Brushed Brass
£29.00 Exc. VAT **£34.80 Inc. VAT**

QX 90mm Shower Trap & Removable Waste
Ref: WFS48TCP Finish: Chrome
£16.00 Exc. VAT **£19.20 Inc. VAT**

QX 80mm Cast Stone Trays

QX 80mm Tray UNIVERSAL

5 YEAR MANUFACTURERS GUARANTEE

Square Tray Sizes:

Size	Ref.	Exc. VAT	Inc. VAT
700 x 700mm	QX700	£153.00	£183.60
760 x 760mm	QX760	£119.00	£142.80
800 x 800mm	QX800	£160.00	£192.00
900 x 900mm	QX900	£278.00	£333.60
1000 x 1000mm	QX1000	£484.00	£580.80

QX 80mm Square Tray

Rectangular Tray Sizes:

Size	Ref.	Exc. VAT	Inc. VAT
800 x 700mm	QX8/7	£305.00	£366.00
900 x 700mm	QX9/7	£308.00	£369.60
900 x 760mm	QX9/76	£294.00	£352.80
900 x 800mm	QX9/8	£311.00	£373.20
1000 x 700mm	QX1/7	£318.00	£381.60
1000 x 760mm	QX1/76	£318.00	£381.60
1000 x 800mm	QX1/8	£285.00	£342.00
1000 x 900mm	QX1/9	£343.00	£411.60
1100 x 700mm*	QX11/7	£349.00	£418.80
1100 x 760mm*	QX11/76	£349.00	£418.80
1100 x 800mm	QX11/8	£341.00	£409.20
1200 x 700mm	QX12/7	£347.00	£416.40
1200 x 760mm	QX12/76	£290.00	£348.00
1200 x 800mm	QX12/8	£327.00	£392.40
1200 x 900mm	QX12/9	£336.00	£403.20
1400 x 800mm	QX14/8	£563.00	£675.60
1400 x 900mm	QX14/9	£563.00	£675.60
1500 x 760mm*	QX15/76	£445.00	£534.00
1600 x 800mm*	QX16/8	£575.00	£690.00
1700 x 700mm*	QX17/7	£635.00	£762.00

**Sizes are TO ORDER ONLY*

QX 80mm Quadrant Tray

Quadrant Tray Size

Size	Ref.	Exc. VAT	Inc. VAT
800mm Quad (550R)	QX8Q	£241.00	£289.20
900mm Quad (550R)	QX9Q	£257.00	£308.40
1000mm Quad (550R)**	QX10Q	£452.00	£542.40
900 x 760mm Quad LH or RH*	QX9/76Q	£373.00	£447.60
900 x 800mm Quad LH or RH*	QX9/8Q	£348.00	£417.60
1000 x 800mm Quad LH or RH*	QX1/8Q	£461.00	£553.20
1200 x 800mm Quad LH or RH*	QX12/8Q	£457.00	£548.40
1200 x 900mm Quad LH or RH*	QX12/9Q	£508.00	£609.60

**Offset Quadrant Trays are TO ORDER ONLY*

***1000mm Quadrant Tray is supplied with 2 Upstands & is TO ORDER ONLY*

Panel Kit Options

Kit Type	Ref.	Exc. VAT	Inc. VAT
Rectangular Tray Kit	GENPANREC	£113.00	£135.60
Square Tray Kit	GENPANSQ	£113.00	£135.60
Quadrant Tray Kit	GENPANQ	£113.00	£135.60
Offset Quadrant Tray Kit	GENPANOQ	£113.00	£135.60

Waste Options:

50mm Shower Trap (90mm Height) with Dome

Ref: ZB36310DB Finish: Chrome

£15.00 Exc. VAT **£18.00 Inc. VAT**

Flow Rate: 36 L/Min

50mm Shower Trap (90mm Height) with Grid

Ref: ZB36320DB Finish: Chrome

£15.00 Exc. VAT **£18.00 Inc. VAT**

Flow Rate: 36 L/Min

50mm Easy-Clean Shower Waste with Removable Grid

Ref: 109CP Finish: Chrome

£6.00 Exc. VAT **£7.20 Inc. VAT**

Long Universal Flexible Shower Waste

Ref: ZB39012DB Finish: White

£17.00 Exc. VAT **£20.40 Inc. VAT**

Extendable from 460-1420mm with 32mm and 40mm connection options

JT Flexi-Fit

Ref: JTFLEXI Length: 3.2 Metres

£104.00 Exc. VAT **£124.80 Inc. VAT**

Flexible, Self-Adhesive, Waterproof Upstand

When your shower tray is only available in a flat-top option, but you want the added benefit and security of a tiling upstand, JT Flexi-Fit ™ is the perfect solution. This flexible, easy-application, tiling upstand tape is self-adhesive, wraps around corners in one piece and creates a watertight seal that accommodates vertical movement of at least 15mm.

40mm & 80mm Tray Specifications

Genesis 40mm Trays | QX 80mm Cast Stone Trays

5 YEAR MANUFACTURERS GUARANTEE

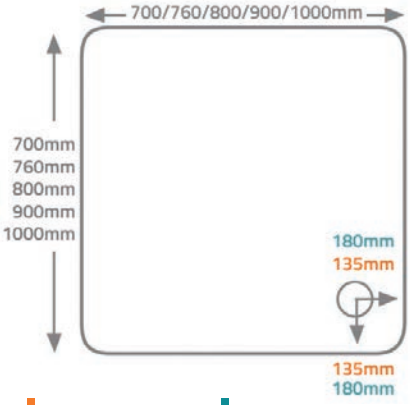

700 x 700mm	700 x 700mm
760 x 760mm	760 x 760mm
800 x 800mm	800 x 800mm
900 x 900mm	900 x 900mm
1000 x 1000mm	1000 x 1000mm

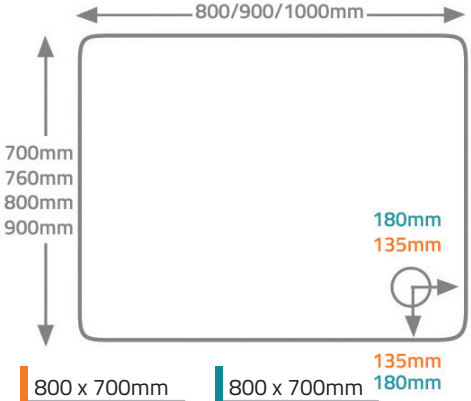

800 x 700mm	800 x 700mm
900 x 700mm	900 x 700mm
900 x 760mm	900 x 760mm
900 x 800mm	900 x 800mm
1000 x 700mm	1000 x 700mm
1000 x 760mm	1000 x 760mm
1000 x 800mm	1000 x 800mm
1000 x 900mm	1000 x 900mm

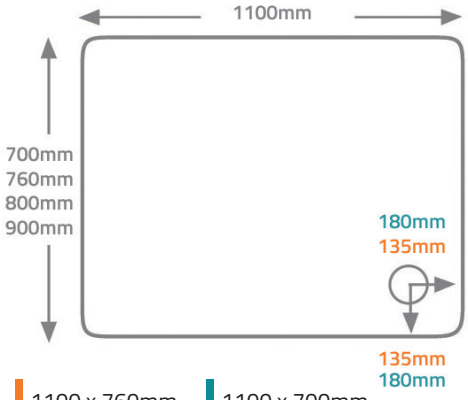

1100 x 760mm	1100 x 700mm
1100 x 800mm	1100 x 760mm
1100 x 900mm	1100 x 800mm

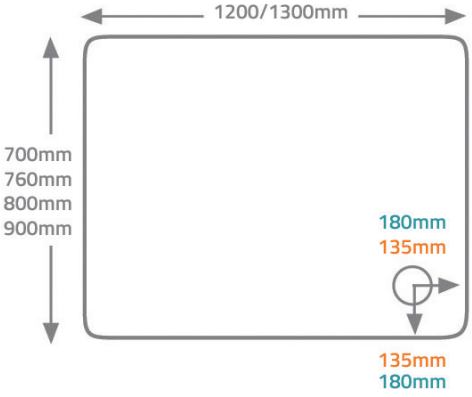

1200 x 700mm	1200 x 700mm
1200 x 760mm	1200 x 760mm
1200 x 800mm	1200 x 800mm
1200 x 900mm	1200 x 900mm
1300 x 800mm	

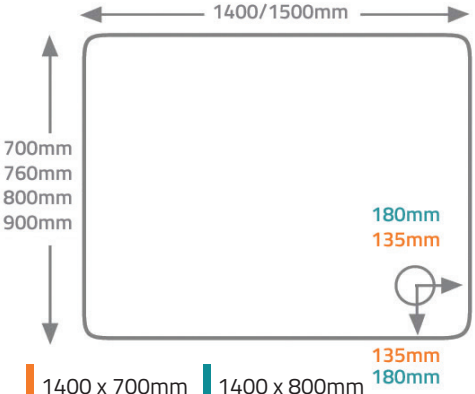

1400 x 700mm	1400 x 800mm
1400 x 800mm	1400 x 900mm
1400 x 900mm	1500 x 760mm
1500 x 700mm	
1500 x 760mm	
1500 x 800mm	
1500 x 900mm	

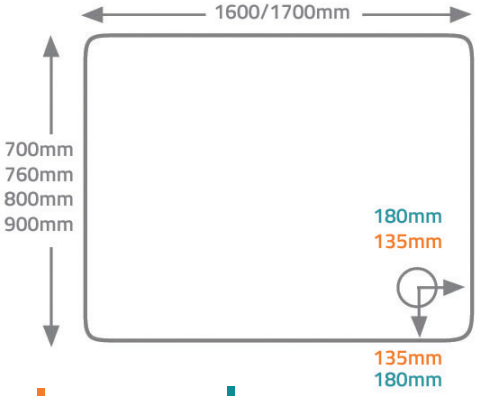

1600 x 700mm	1600 x 800mm
1600 x 760mm	1700 x 700mm
1600 x 800mm	
1600 x 900mm	
1700 x 700mm	
1700 x 760mm	
1700 x 800mm	
1700 x 900mm	

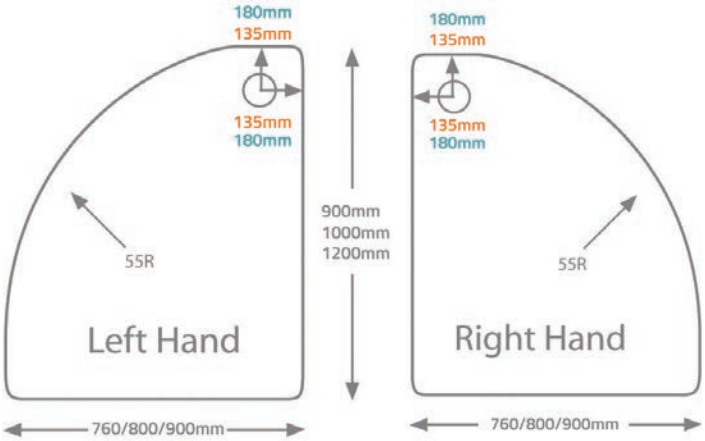

900 x 760mm Offset Quad	900 x 760mm Offset Quad
1000 x 800mm Offset Quad	900 x 800mm Offset Quad
1200 x 800mm Offset Quad	1000 x 800mm Offset Quad
1200 x 900mm Offset Quad	1200 x 800mm Offset Quad
	1200 x 900mm Offset Quad

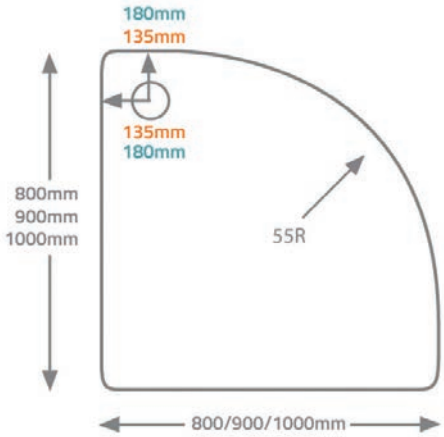

800mm Quad	800mm Quad
900mm Quad	900mm Quad
1000mm Quad	1000mm Quad

Ascent Wetroom Trays

Pre-Formed Wetroom Shower Base

Designed for walk-in shower and wetroom applications, the Ascent Wetroom Trays are pre-formed to create an effective water slope to the drain. They are floor level panels that can easily be trimmed to fit the shower area. Trays are ready to receive a tiled finish of the customers choice.

Ascent pre-formed Wetroom Trays are made using a waterproof extruded polystyrene (XPS) and are covered on both sides in a combination of polymer resin and quartz, compatible with most tile adhesives. All Wetroom Trays are exclusively made to accept our QX range of Linear and Square Drains. They are sufficiently robust to be covered with mosaic tiles without the risk of compression through point loading.

Ascent Wetroom Trays and Boards are suitable for use with Underfloor Heating. All Drains can also be used without a shower base. **NOTE: Ascent Wetroom Trays ARE NOT SUITABLE for Vinyl Flooring.**

Linear Drain Tray

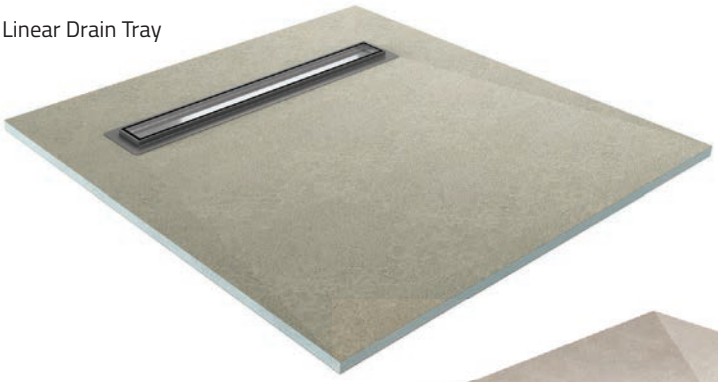

Square Drain Tray
Corner Drain

Square Drain Tray
Centre Drain

Ascent Wetroom Linear Tray and Pure Linear Drain
Drain is disguised with matching, neat tiling

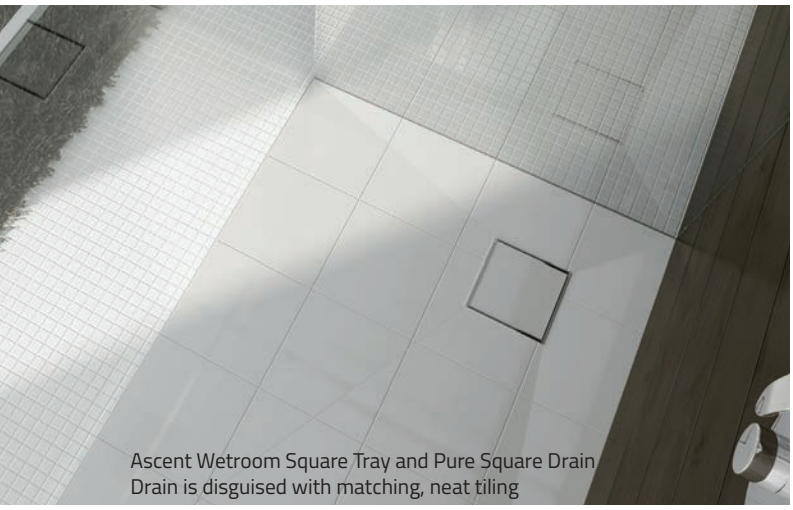

Ascent Wetroom Square Tray and Pure Square Drain
Drain is disguised with matching, neat tiling

Ascent Wetroom Square Tray and
Zonda Square Drain

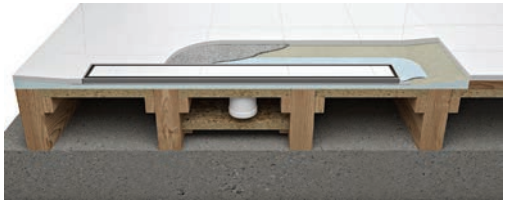

Tray & Drain using underboarding, including under trap

Tray & Drain laid directly on floor boards

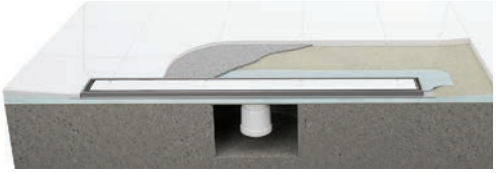

Tray & Drain laid directly onto a concrete floor

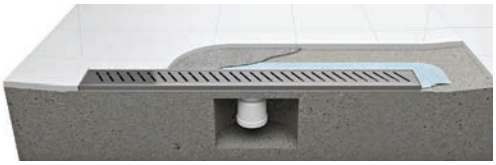

Drain only creating a channel for the trap and wastepipe.

Installation

- Ascent Wetroom Trays can be laid directly onto existing wooden or concrete floors but must be supported over it's entire area, including trap (see diagram).
- Wooden floors can be lowered by 'under-boarding'. Removing the existing floor boards, fixing battens and plywood, finishing level with the top of the joists.
- If the tray is to be laid onto the existing floorboards, they must be in good condition and must be screwed down at very close centres.
- When the tray is laid onto a concrete floor, the surface below the tray must be perfectly flat, with a channel for the trap & waste pipe.
- **Care must be taken when preparing the slopes to the drain in all applications.**
- **Trays can be trimmed on-site to exact requirement, up to a maximum of 50mm***

**If trimming is required, an even amount must be trimmed from opposing sides of the tray.*

Linear Drain Wetroom Trays

Ascent Linear Drain Pre-Formed Trays

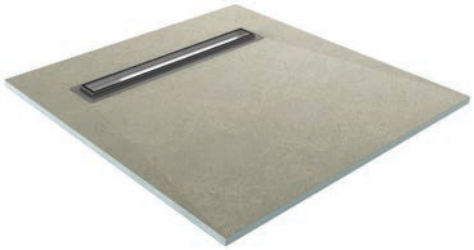

Linear Tray, Shower Base

Size	Ref.	Thickness at Edge	Linear Drain Size	Exc. VAT	Inc. VAT
900 x 900mm	SBAS9X9L	20mm	600mm	£217.00	£260.40
1000 x 1000mm	SBAS10X10L	20mm	700mm	£268.00	£321.60
1200 x 1200mm	SBAS12X12L	20mm	900mm	£387.00	£464.40
1200 x 760mm	SBAS12X76L	20mm	900mm	£245.00	£294.00
1200 x 800mm	SBAS12X8L	20mm	900mm	£260.00	£312.00
1200 x 900mm	SBAS12X9L	30mm	600mm	£291.00	£349.20
1400 x 900mm	SBAS14X9L	30mm	600mm	£337.00	£404.40
1500 x 800mm	SBAS15X8L	20mm	1200mm	£321.00	£385.20
1500 x 900mm	SBAS15X9L	30mm	600mm	£362.00	£434.40
1600 x 900mm	SBAS16X9L	20mm	1200mm	£387.00	£464.40
1700 x 900mm	SBAS17X9L	20mm	1200mm	£413.00	£495.60
1850 x 900mm	SBAS18X9L	20mm	1200mm	£448.00	£537.60

Linear Drain - 600mm

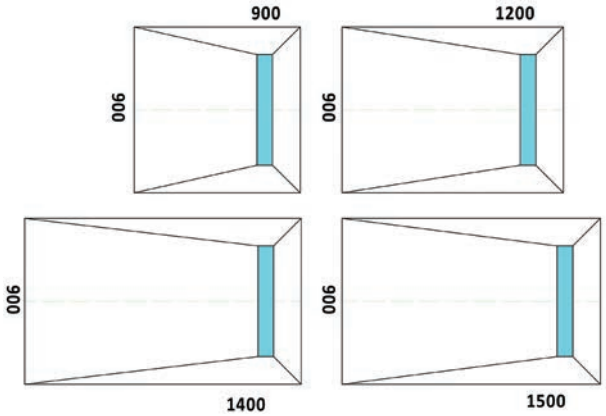

Linear Drain - 700mm & 900mm

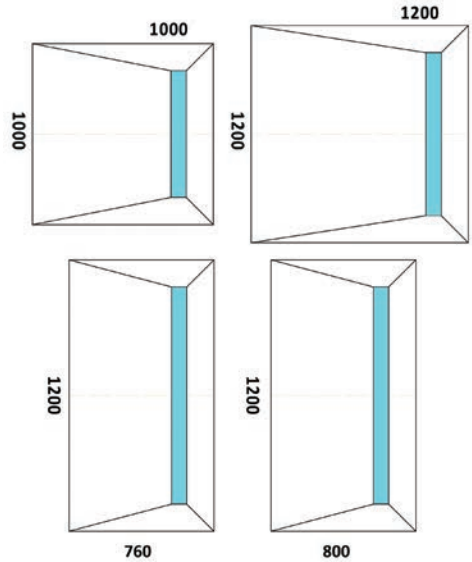

Linear Drain - 1200mm

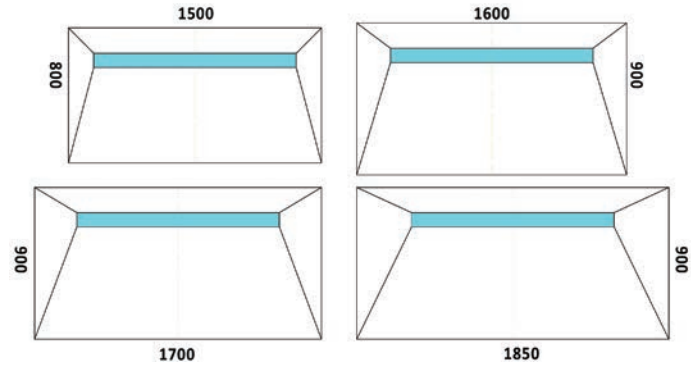

Waste is positioned 192mm from the edge of the tray to the centre of the waste.

Shower Base Sealing Kit includes:

- 10 Mtr x 120mm Membrane Sealing Tape
- 2 x Membrane Pipe Covers
- 2 x Membrane Internal Corner Sections
- 1 Ltr Primer
- 4kg of Waterproof Adhesive/Sealing Compound

Additional Items

Description	Ref.	Exc. VAT	Inc. VAT
Shower Base Sealing Kit	SBAS-SKIT	£165.00	£198.00
Adjustable Legs*	SBAS-LEG	£23.00	£27.60

**Only needed when laying a new concrete floor*

Linear Drain Wetroom Trays

Linear Drain Options

Linear Drains are produced from 304 grade stainless steel and feature a flange on all four sides, enabling a perfect waterproof seal between the tiles and the drain, complimented by a textile sealing membrane.

Linear Drains are available from stock in the following sizes: 600mm, 700mm, 900mm & 1200mm.

Zonda Linear Drain

Stainless Steel Grating in Mirror Finish

Zonda Linear Drain - Includes Flange, Membrane & Trap

Size	Ref.	Exc. VAT	Inc. VAT
600mm	ZON600	£290.00	£348.00
700mm	ZON700	£311.00	£373.20
900mm	ZON900	£355.00	£426.00
1200mm	ZON1200	£420.00	£504.00

Pure Linear Drain

'Hidden' Tile Design, ready for tiling *Shown above with tiles installed - not supplied*

Pure Linear Drain - Includes Flange, Membrane & Trap

Size	Ref.	Exc. VAT	Inc. VAT
600mm	PUR600	£312.00	£374.40
700mm	PUR700	£333.00	£399.60
900mm	PUR900	£376.00	£451.20
1200mm	PUR1200	£442.00	£530.40

Ponente Linear Drain

Stainless Steel Grating in Mirror Finish

Ponente Linear Drain - Includes Flange, Membrane & Trap

Size	Ref.	Exc. VAT	Inc. VAT
600mm	PON600	£312.00	£374.40
700mm	PON700	£333.00	£399.60
900mm	PON900	£376.00	£451.20
1200mm	PON1200	£442.00	£530.40

Mistral Linear Drain

Stainless Steel Grating in Mirror Finish

Mistral Linear Drain - Includes Flange, Membrane & Trap

Size	Ref.	Exc. VAT	Inc. VAT
600mm	MIS600	£290.00	£348.00
700mm	MIS700	£311.00	£373.20
900mm	MIS900	£355.00	£426.00
1200mm	MIS1200	£420.00	£504.00

84mm Visible Drain

Standard Drain with Membrane and Trap

Shown with Pure Drain without Tiles installed

Slimline Linear Drains

Slimline Linear Drain Options

Our Slimline Drain options are suitable for use with the existing Linear Pre-Formed Tray options

Slim Black Linear Drain

Stainless Steel Grating in Matt Black Finish

Slim Black Linear Drain - Includes Flange, Membrane & Trap

Size	Ref.	Exc. VAT	Inc. VAT
600mm	SLM6MB	£328.00	£393.60
700mm	SLM7MB	£349.00	£418.80
900mm	SLM9MB	£395.00	£474.00
1200mm	SLM12MB	£464.00	£556.80

Slim Mirror Linear Drain

Stainless Steel Grating in Mirror Finish

Slim Mirror Linear Drain - Includes Flange, Membrane & Trap

Size	Ref.	Exc. VAT	Inc. VAT
600mm	SLM6SS	£297.00	£356.40
700mm	SLM7SS	£316.00	£379.20
900mm	SLM9SS	£358.00	£429.60
1200mm	SLM12SS	£420.00	£504.00

Slim Sirocco Linear Drain

Stainless Steel Grating in Mirror Finish

Slim Sirocco Linear Drain - Includes Flange, Membrane & Trap

Size	Ref.	Exc. VAT	Inc. VAT
600mm	SLM6SI	£312.00	£374.40
700mm	SLM7SI	£333.00	£399.60
900mm	SLM9SI	£376.00	£451.20
1200mm	SLM12SI	£442.00	£530.40

Slimline

46mm Visible Drain

Slimline Drain with Membrane and Trap
Shown with Sirocco Drain

Square Drain Wetroom Trays

Square Pre-Formed Tray & Drain Options

Square Shower Base for Square Drain - *Offset Waste*

Size	Ref.	Thickness at Edge	Linear Drain Size	Exc. VAT	Inc. VAT
800 x 800mm	SBAS8X8S	20mm	120 x 120mm	£169.00	£202.80
900 x 900mm	SBAS9X9S	20mm	120 x 120mm	£217.00	£260.40
1000 x 1000mm	SBAS10X10S	30mm	120 x 120mm	£296.00	£355.20
1200 x 1200mm	SBAS12X12S	30mm	120 x 120mm	£425.00	£510.00

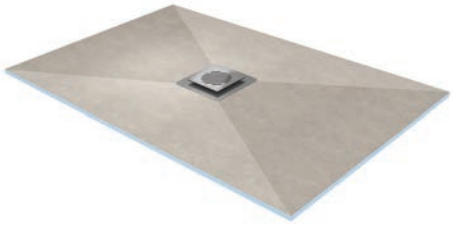

Rectangular Shower Base for Square Drain - *Centre Waste*

Size	Ref.	Thickness at Edge	Linear Drain Size	Exc. VAT	Inc. VAT
1200 x 900mm	SBAS12X9S	30mm	150 x 150mm	£291.00	£349.20
1400 x 900mm	SBAS14X9S	30mm	150 x 150mm	£337.00	£404.20
1500 x 900mm	SBAS15X9S	30mm	150 x 150mm	£362.00	£434.40
1600 x 800mm	SBAS16X8S	30mm	150 x 150mm	£344.00	£412.80
1700 x 800mm	SBAS17X8S	30mm	150 x 150mm	£367.00	£440.40

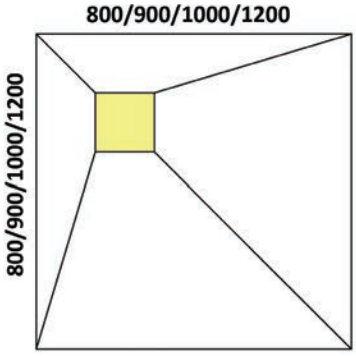

Square Shower Base for Square Drain

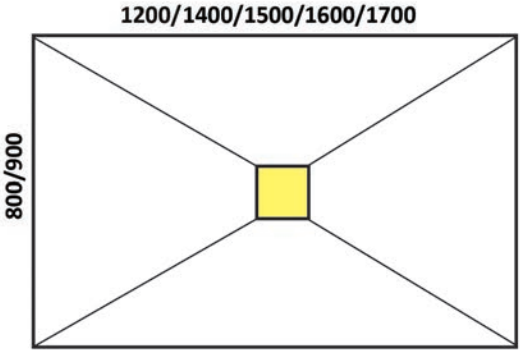

Rectangular Shower Base for Square Drain

For Trays with corner waste, the waste is positioned 210mm from the edge of the tray to the centre of the waste.

Rotate Tray Base for best Waste position

Square Drains are produced from 304 grade stainless steel and feature a flange on all four sides, enabling a perfect waterproof seal between the tiles and the drain, complimented by a textile sealing membrane.

Square Drains are available from stock in the following sizes: 120 x 120mm & 150 x 150mm

Pure Square Drain
Ready for Tiling

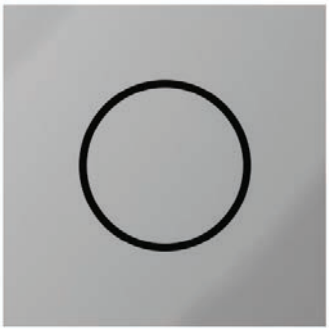

Ponente Square Drain

Zonda Square Drain

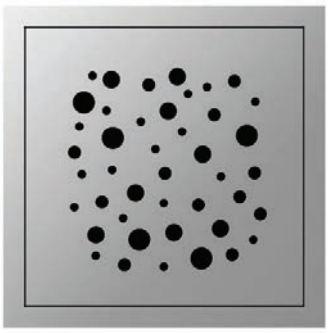

Mistral Square Drain

120 x 120mm Square Drain

Drain	Ref.	Exc. VAT	Inc. VAT
Pure	PUR120X120	£161.00	£193.20
Ponente	PON120X120	£161.00	£193.20
Zonda	ZON120X120	£161.00	£193.20
Mistral	MIS120X120	£161.00	£193.20

150 x 150mm Square Drain

Drain	Ref.	Exc. VAT	Inc. VAT
Pure	PUR150X150	£198.00	£237.60
Ponente	PON150X150	£198.00	£237.60
Zonda	ZON150X150	£198.00	£237.60
Mistral	MIS150X150	£198.00	£237.60

Round Shower Kit Options

Complete Shower Kit Options or Mix & Match to Create your own Kit

Shower Kit - 1R

Shower Head Components

	Ref.	Exc. VAT	Inc. VAT
Nevada Rainfall Shower Head *(500 x 200mm)*	FLS-8110A	£235.00	**£282.00**

Add your choice of Shower Valve below to complete your Kit

Ebony Round Twin Thermostatic Shower Valve with 1 Outlet (Controls 1 Function)

Requires 0.5 Bar Pressure Min

Ref: EB-RND-2X1W

£189.00 Exc. VAT **£226.80 Inc. VAT**

Kit Total £424.00 Exc. VAT £508.80 Inc. VAT

Rimini Single Thermostatic Push-Button Shower Valve with 1 Outlet (Controls 1 Function)

Requires 0.5 Bar Pressure Min

Ref: RIMPB1

£219.00 Exc. VAT **£262.00 Inc. VAT**

Kit Total £454.00 Exc. VAT £544.80 Inc. VAT

Ohio Twin Thermostatic Shower Valve with 1 Outlet (Controls 1 Function)

Requires 0.2 Bar Pressure Min

Ref: QX-OH-TW1W

£194.00 Exc. VAT **£232.80 Inc. VAT**

Kit Total £429.00 Exc. VAT £514.80 Inc. VAT

Shower Kit - 2R

Shower Head Components

	Ref.	Exc. VAT	Inc. VAT
Nevada Rainfall Shower Head *(500 x 200mm)*	FLS-8110A	£235.00	**£282.00**
Nevada Square Outlet Elbow	P652	£22.00	**£26.40**
Square Riser Rail & Kit	ASSQKIT	£131.00	**£157.20**

Add your choice of Shower Valve below to complete your Kit

Ebony Round Twin Thermostatic Shower Valve with 2 Outlets (Controls 2 Functions)

Requires 0.5 Bar Pressure Min

Ref: EB-RND-2X2W

£200.00 Exc. VAT **£240.00 Inc. VAT**

Kit Total £588.00 Exc. VAT £705.60 Inc. VAT

Rimini Twin Thermostatic Push-Button Shower Valve with 2 Outlets (Controls 2 Functions)

Requires 0.5 Bar Pressure Min

Ref: RIMPB2

£248.00 Exc. VAT **£297.60 Inc. VAT**

Kit Total £636.00 Exc. VAT £763.20 Inc. VAT

Ohio Twin Thermostatic Shower Valve with 2 Outlets (Controls 2 Functions)

Requires 0.2 Bar Pressure Min

Ref: QX-OH-TW2W

£219.00 Exc. VAT **£262.80 Inc. VAT**

Kit Total £607.00 Exc. VAT £728.40 Inc. VAT

Shower Kit - 3R

Shower Head Components

	Ref.	Exc. VAT	Inc. VAT
Nevada Rainfall & Waterfall Shower Head *(500 x 200mm)*	FLS-8110B	£249.00	**£298.80**

Add your choice of Shower Valve below to complete your Kit

Ebony Round Triple Thermostatic Shower Valve with 2 Outlets (Controls 2 Functions)

Requires 0.5 Bar Pressure Min

Ref: EB-RND-3X2W

£270.00 Exc. VAT **£324.00 Inc. VAT**

Kit Total £519.00 Exc. VAT £622.80 Inc. VAT

Rimini Twin Thermostatic Push-Button Shower Valve with 2 Outlets (Controls 2 Functions)

Requires 0.5 Bar Pressure Min

Ref: RIMPB2

£248.00 Exc. VAT **£297.60 Inc. VAT**

Kit Total £497.00 Exc. vAT £596.40 Inc. VAT

Ohio Triple Thermostatic Shower Valve with 2 Outlets (Controls 2 Functions)

Requires 0.2 Bar Pressure Min

Ref: QX-OH-TR2W

£235.00 Exc. VAT **£282.00 Inc. VAT**

Kit Total £484.00 Exc. VAT £580.80 Inc. VAT

Round Shower Kit Options

Complete Shower Kit Options or Mix & Match to Create your own Kit

2 YEAR MANUFACTURERS GUARANTEE

Shower Kit - 4R

Shower Head Components

	Ref.	Exc. VAT	Inc. VAT
Ohio Round Shower Head *(200mm Diameter)*	FLS-8002C	£56.00	£67.20
Ohio Shower Head Fixing Arm *(400 x 24mm)*	FLS-801C	£47.00	£56.40
Ohio Round Outlet Elbow	P653	£14.00	£16.80
Ohio Round Riser Rail & Kit	QXRK002	£108.00	**£129.60**

Add your choice of Shower Valve below to complete your Kit

Ebony Round Twin Thermostatic Shower Valve with 2 Outlets (Controls 2 Functions)

Requires 0.5 Bar Pressure Min

Ref: EB-RND-2X2W

£200.00 Exc. VAT **£240.00 Inc. VAT**

Kit Total £425.00 Exc. VAT £510.00 Inc. VAT

Rimini Twin Thermostatic Push-Button Shower Valve with 2 Outlets (Controls 2 Functions)

Requires 0.5 Bar Pressure Min

Ref: RIMPB2

£248.00 Exc. VAT **£297.60 Inc. VAT**

Kit Total £473.00 Exc. VAT £567.60 Inc. VAT

Ohio Twin Thermostatic Shower Valve with 2 Outlets (Controls 2 Functions)

Requires 0.2 Bar Pressure Min

Ref: QX-OH-TW2W

£219.00 Exc. VAT **£262.80 Inc. VAT**

Kit Total £444.00 Exc. VAT £532.80 Inc. VAT

Shower Kit - 5R

Shower Head Components

	Ref.	Exc. VAT	Inc. VAT
Nevada Square Shower Head *(200 x 200mm)*	FLS-8001C	£64.00	£76.80
Nevada Shower Head Fixing Arm *(400 x 24mm)*	FLS-801-2F	£52.00	£62.40
Nevada Square Outlet Elbow	P652	£22.00	**£26.40**
Nevada Square Riser Rail & Kit	SH903	£118.00	£141.60

Add your choice of Shower Valve below to complete your Kit

Ebony Round Twin Thermostatic Shower Valve with 2 Outlets (Controls 2 Functions)

Requires 0.5 Bar Pressure Min

Ref: EB-RND-2X2W

£200.00 Exc. VAT **£240.00 Inc. VAT**

Kit Total £456.00 Exc. VAT £547.20 Inc. VAT

Rimini Twin Thermostatic Push-Button Shower Valve with 2 Outlets (Controls 2 Functions)

Requires 0.5 Bar Pressure Min

Ref: RIMPB2

£248.00 Exc. VAT **£297.60 Inc. VAT**

Kit Total £504.00 Exc. VAT £604.80 Inc. VAT

Ohio Twin Thermostatic Shower Valve with 2 Outlets (Controls 2 Functions)

Requires 0.2 Bar Pressure Min

Ref: QX-OH-TW2W

£219.00 Exc. VAT **£262.80 Inc. VAT**

Kit Total £475.00 Exc. VAT £570.00 Inc. VAT

Square Shower Kit Options

Complete Shower Kit Options or Mix & Match to Create your own Kit

Shower Kit - 1SQ

Shower Head Components

	Ref.	Exc. VAT	Inc. VAT
Nevada Rainfall Shower Head *(500 x 200mm)*	FLS-8110A	£235.00	**£282.00**

Add your choice of Shower Valve below to complete your Kit

Ebony Square Twin Thermostatic Shower Valve with 1 Outlet (Controls 1 Function)

Requires 0.5 Bar Pressure Min

Ref: EB-SQR-2X1W

£189.00 Exc. VAT **£226.80 Inc. VAT**

Kit Total £424.00 Exc. VAT £508.80 Inc. VAT

Gemini Single Thermostatic Push-Button Shower Valve with 1 Outlet (Controls 1 Function)

Requires 0.5 Bar Pressure Min

Ref: GEMPB1

£232.00 Exc. VAT **£278.40 Inc. VAT**

Kit Total £467.00 Exc. VAT £560.40 Inc. VAT

Nevada Twin Thermostatic Shower Valve with 1 Outlet (Controls 1 Function)

Requires 0.2 Bar Pressure Min

Ref: QX-NEV-TW1W

£194.00 Exc. VAT **£232.80 Inc. VAT**

Kit Total £429.00 Exc. VAT £514.80 Inc. VAT

Shower Kit - 2SQ

Shower Head Components

	Ref.	Exc. VAT	Inc. VAT
Nevada Rainfall Shower Head *(500 x 200mm)*	FLS-8110A	£235.00	**£282.00**
Nevada Square Outlet Elbow	P652	£22.00	**£26.40**
Square Riser Rail & Kit	ASSQKIT	£131.00	**£157.20**

Add your choice of Shower Valve below to complete your Kit

Ebony Square Twin Thermostatic Shower Valve with 2 Outlets (Controls 2 Functions)

Requires 0.5 Bar Pressure Min

Ref: EB-SQR-2X2W

£200.00 Exc. VAT **£240.00 Inc. VAT**

Kit Total £588.00 Exc. VAT £705.60 Inc. VAT

Gemini Twin Thermostatic Push-Button Shower Valve with 2 Outlets (Controls 2 Functions)

Requires 0.5 Bar Pressure Min

Ref: GEMPB2

£263.00 Exc. VAT **£315.60 Inc. VAT**

Kit Total £651.00 Exc. VAT £781.20 Inc. VAT

Nevada Twin Thermostatic Shower Valve with 2 Outlets (Controls 2 Functions)

Requires 0.2 Bar Pressure Min

Ref: QX-NEV-TW2W

£219.00 Exc. VAT **£262.80 Inc. VAT**

Kit Total £607.00 Exc. VAT £728.40 Inc. VAT

Shower Kit - 3SQ

Shower Head Components

	Ref.	Exc. VAT	Inc. VAT
Nevada Rainfall & Waterfall Shower Head *(500 x 200mm)*	FLS-8110B	£249.00	**£298.80**

Add your choice of Shower Valve below to complete your Kit

Ebony Square Triple Thermostatic Shower Valve with 2 Outlets (Controls 2 Functions)

Requires 0.5 Bar Pressure Min

Ref: EB-SQR-3x2W

£270.00 Exc. VAT **£324.00 Inc. VAT**

Kit Total £519.00 Exc. VAT £622.80 Inc. VAT

Gemini Twin Thermostatic Push-Button Shower Valve with 2 Outlets (Controls 2 Functions)

Requires 0.5 Bar Pressure Min

Ref: GEMPB2

£263.00 Exc. VAT **£315.60 Inc. VAT**

Kit Total £512.00 Exc. VAT £614.40 Inc. VAT

Nevada Triple Thermostatic Shower Valve with 2 Outlets (Controls 2 Functions)

Requires 0.2 Bar Pressure Min

Ref: QX-NEV-TR2W

£254.00 Exc. VAT **£304.80 Inc. VAT**

Kit Total £503.00 Exc. VAT £603.60 Inc. VAT

Square Shower Kit Options

Complete Shower Kit Options or Mix & Match to Create your own Kit

2 YEAR MANUFACTURERS GUARANTEE

Shower Kit - 4SQ

Shower Head Components

	Ref.	Exc. VAT	Inc. VAT
Ohio Round Shower Head *(200mm Diameter)*	FLS-8002C	£56.00	£67.20
Ohio Shower Head Fixing Arm *(400 x 24mm)*	FLS-801C	£47.00	£56.40
Ohio Round Outlet Elbow	P653	£14.00	£16.80
Ohio Round Riser Rail & Kit	QXRK002	£108.00	£129.60

Add your choice of Shower Valve below to complete your Kit

Ebony Square Twin Thermostatic Shower Valve with 2 Outlets (Controls 2 Functions)

Requires 0.5 Bar Pressure Min

Ref: EB-SQR-2X2W

£200.00 Exc. VAT £240.00 Inc. VAT

Kit Total £425.00 Exc. VAT £510.00 Inc. VAT

Gemini Twin Thermostatic Push-Button Shower Valve with 2 Outlets (Controls 2 Functions)

Requires 0.5 Bar Pressure Min

Ref: GEMPB2

£263.00 Exc. VAT £315.60 Inc. VAT

Kit Total £488.00 Exc. VAT £585.60 Inc. VAT

Nevada Twin Thermostatic Shower Valve with 2 Outlets (Controls 2 Functions)

Requires 0.2 Bar Pressure Min

Ref: QX-NEV-TW2W

£219.00 Exc. VAT £262.80 Inc. VAT

Kit Total £444.00 Exc. VAT £532.80 Inc. VAT

Shower Kit - 5SQ

Shower Head Components

	Ref.	Exc. VAT	Inc. VAT
Nevada Square Shower Head *(200 x 200mm)*	FLS-8001C	£64.00	£76.80
Nevada Shower Head Fixing Arm *(400 x 24mm)*	FLS-801-2F	£52.00	£62.40
Nevada Square Outlet Elbow	P652	£22.00	£26.40
Nevada Square Riser Rail & Kit	SH903	£118.00	£141.60

Add your choice of Shower Valve below to complete your Kit

Ebony Square Twin Thermostatic Shower Valve with 2 Outlets (Controls 2 Functions)

Requires 0.5 Bar Pressure Min

Ref: EB-SQR-2X2W

£200.00 Exc. VAT £240.00 Inc. VAT

Kit Total £456.00 Exc. VAT £547.20 Inc. VAT

Gemini Twin Thermostatic Push-Button Shower Valve with 2 Outlets (Controls 2 Functions)

Requires 0.5 Bar Pressure Min

Ref: GEMPB2

£263.00 Exc. VAT £315.60 Inc. VAT

Kit Total £519.00 Exc. VAT £622.80 Inc. VAT

Nevada Twin Thermostatic Shower Valve with 2 Outlets (Controls 2 Functions)

Requires 0.2 Bar Pressure Min

Ref: QX-NEV-TW2W

£219.00 Exc. VAT £262.80 Inc. VAT

Kit Total £475.00 Exc. VAT £570.00 Inc. VAT

Shower Kit - 6SQ

Shower Head Components

	Ref.	Exc. VAT	Inc. VAT
Nevada Rainfall & Waterfall Shower Head *(500 x 200mm)*	FLS-8110B	£249.00	£298.80
Nevada Square Outlet Elbow	P652	£22.00	£26.40
Nevada Square Riser Rail & Kit	SH903	£118.00	£141.60

Add your choice of Shower Valve below to complete your Kit

Nevada Triple Thermostatic Shower Valve with 3 Outlets (Controls 2 Functions)

Requires 0.2 Bar Pressure Min

Ref: QX-NEV-TR3W

£269.00 Exc. VAT £322.80 Inc. VAT

Kit Total £658.00 Exc. VAT £789.60 Inc. VAT

Gemini Triple Thermostatic Push-Button Shower Valve with 3 Outlets (Controls 3 Functions)

Requires 0.5 Bar Pressure Min

Ref: GEMPB3

£314.00 Exc. VAT £376.80 Inc. VAT

Kit Total £703.00 Exc. VAT £843.60 Inc. VAT

Ohio Triple Thermostatic Shower Valve with 3 Outlets (Controls 2 Functions)

Requires 0.2 Bar Pressure Min

Ref: QX-OH-TR3W

£269.00 Exc. VAT £322.80 Inc. VAT

Kit Total £658.00 Exc. VAT £789.60 Inc. VAT

Utah Black Shower Kits

Utah Shower Valves Require Min. 0.5 Bar Pressure

Utah Round Shower Kit

	Ref.	Exc. VAT	Inc. VAT
Utah Round Riser Kit	QXSR04K	£129.00	**£154.80**
Utah Round Twin Thermostatic Valve	QXCVP03K	£252.00	**£302.40**
TOTAL		**£381.00**	**£457.20**

Utah Square Shower Kit

	Ref.	Exc. VAT	Inc. VAT
Utah Square Riser Kit	QXSR03AK	£166.00	**£199.20**
Utah Square Fixed Shower Head	QXSHD2525BK	£80.00	**£96.00**
Utah Square Shower Head Fixing Arm	QXSA02K	£58.00	**£69.60**
Utah Square Triple Thermostatic Valve	QXCVP11K	£292.00	**£350.40**
TOTAL		**£596.00**	**£715.20**

Ascent Shower Kits

Manual & Thermostatic Shower Valves including Shower Kits

2 YEAR MANUFACTURERS GUARANTEE

MANUAL

Trio Exposed Manual Shower Valve with Riser Rail

Min. Pressure Req. - 1.5 bar

Ref: TRX10 Finish: Chrome

Height: 900 - 1100mm

£369.00 Exc. VAT **£442.80 Inc. VAT**

- Exposed Manual Valve with Diverter
- Cross-Head Handles
- Adjustable Rigid Riser Rail with Round Rainfall Shower Head
- Circular Handspray

MANUAL

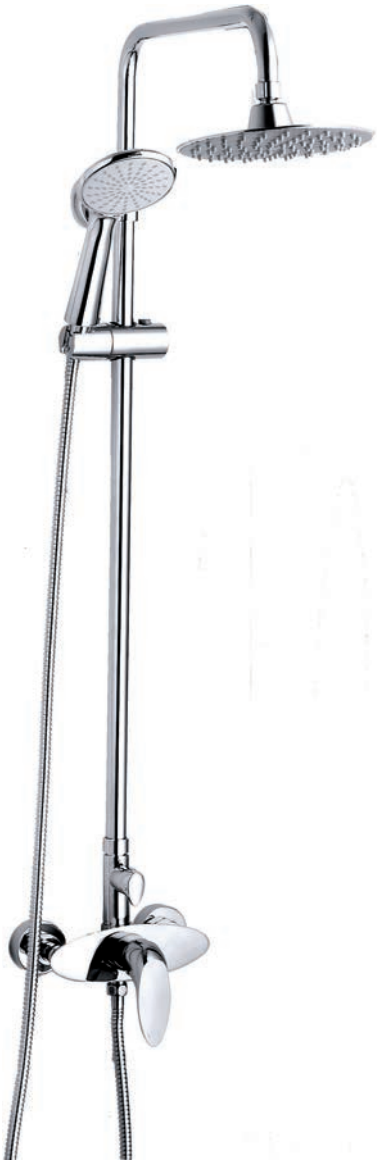

Alaska Exposed Manual Shower Valve with Riser Rail

Min. Pressure Req. - 0.5 bar

Ref: S6002A Finish: Chrome

Height: 880 - 1330mm

£319.00 Exc. VAT **£382.80 Inc. VAT**

- Exposed Manual Valve with Diverter
- Single Lever Handle
- Adjustable Rigid Riser Rail with Round Rainfall Shower Head
- Circular Handspray

MANUAL

Alaska Manual Shower Valve with Riser Rail & Spout

Min. Pressure Req. - 0.5 bar

Ref: S6001A Finish: Chrome

Height: 900 - 1350mm

£362.00 Exc. VAT **£434.40 Inc. VAT**

- Exposed Manual Bar Valve with Diverter
- Rigid Riser Rail with Round Rainfall Shower Head
- Circular Handspray
- Integrated Bath Spout

THERMOSTATIC

Extended Height Nevada Shower Valve with Riser Rail & Spout

Min. Pressure Req. - 1 bar

Ref: S1032 Finish: Chrome

Overall Height: 1170 - 1540mm

£406.00 Exc. VAT **£487.20 Inc. VAT**

- Exposed Square Thermostatic Bar Valve with Diverter
- Rigid Riser Rail with Square Rainfall Shower Head
- Square Handspray
- Integrated Bath Spout

Genesis Shower Kits

Thermostatic Shower Valves including Shower Kits

THERMOSTATIC

Ebony Round Thermostatic Bar Valve & Riser Kit
Min. Pressure Req. - 0.2 bar
Ref: EB102 Finish: Chrome
Height: 850 - 1200mm
£235.00 Exc. VAT **£282.00 Inc. VAT**

- Exposed Round Thermostatic Bar Valve with Diverter
- Adjustable Rigid Riser Rail with Round Rainfall Shower Head
- Round Rainfall Shower Handset
- TMV2

THERMOSTATIC

Ebony Square Thermostatic Bar Valve & Riser Kit
Min. Pressure Req. - 0.2 bar
Ref: EB101 Finish: Chrome
Height: 800 - 1150mm
£282.00 Exc. VAT **£338.40 Inc. VAT**

- Exposed Square Thermostatic Bar Valve with Diverter
- Adjustable Rigid Riser Rail with Square Rainfall Shower Head
- Square Shower Handset
- TMV2

THERMOSTATIC

Valve & Kit
£174.00

Ohio Thermostatic Bar Valve & Riser Kit
Min. Pressure Req. - 0.2 bar
Ref: OH-RSRKIT Finish: Chrome
Height: 620mm
£135.00 Exc. VAT
£162.00 Inc. VAT

- Exposed Thermostatic Valve
- Includes Shower Kit
- Round Rainfall Shower Handset

THERMOSTATIC

Valve & Kit
£292.80 Inc. VAT

Valve Only
£135.60 Inc. VAT

Nevada Square Thermostatic Bar Valve Only
Min. Pressure Req. - 1 bar
Ref: ASC-80814
Finish: Chrome
£113.00 Exc. VAT
£135.60 Inc. VAT

Ascot Square Shower Kit Only
Ref: ASSQKIT
Finish: Chrome
Height: 688mm
£131.00 Exc. VAT
£157.20 Inc. VAT

Alpha Thermostatic Bar Valve & Riser Kit
Min. Pressure Req. - 0.2 bar
Ref: ALP-KIT1 Finish: Chrome
Height: 620mm
£112.00 Exc. VAT **£134.40 Inc. VAT**

- Exposed Thermostatic Valve
- Includes Shower Kit
- Round Rainfall Shower Handset

Atlanta Shower Kits

Thermostatic Shower Valves with Shower Kits in Brushed Brass Finish

2 YEAR MANUFACTURERS GUARANTEE

THERMOSTATIC

THERMOSTATIC

Atlanta Round Thermostatic Bar Valve & Riser Kit
Min. Pressure Req. - 0.5 bar

Ref: AT104BB Finish: Brushed Brass
Height: 850 - 1200mm
£359.00 Exc. VAT **£430.80 Inc. VAT**

- Exposed Round Thermostatic Bar Valve with Diverter
- Adjustable Rigid Riser Rail with Round Rainfall Shower Head
- Round Rainfall Shower Handset
- TMV2

Atlanta Square Thermostatic Bar Valve & Riser Kit
Min. Pressure Req. - 0.5 bar

Ref: AT103BB Finish: Brushed Brass
Height: 850 - 1200mm
£419.00 Exc. VAT **£502.80 Inc. VAT**

- Exposed Square Thermostatic Bar Valve with Diverter
- Adjustable Rigid Riser Rail with Square Rainfall Shower Head
- Square Shower Handset
- TMV2

Utah & Roma Shower Kits

Thermostatic Shower Valves with Shower Kits in Matt Black and Matt Grey Finishes

Utah - Matt Black

Roma - Matt Grey

Utah Square Thermostatic Bar Valve & Riser Kit
Min. Pressure Req. - 0.5 bar

Ref: QXSH103K	
Finish: Matt Black	
Height: 800 - 1180mm	
£355.00 Exc. VAT	
£426.60 Inc. VAT	

- Exposed Square Thermostatic Bar Valve with Diverter
- Adjustable Rigid Riser Rail with Square Rainfall Shower Head

Roma Square Thermostatic Bar Valve & Riser Kit
Min. Pressure Req. - 0.5 bar

Ref: QXSH103MG	
Finish: Matt Grey	
Height: 800 - 1180mm	
£341.00 Exc. VAT	
£409.20 Inc. VAT	

- Square Shower Handset
- WRAS Approved
- TMV2

Utah Round Thermostatic Bar Valve & Riser Kit
Min. Pressure Req. - 0.5 bar

Ref: QXSH104K	
Finish: Matt Black	
Height: 870 - 1200mm	
£263.00 Exc. VAT	
£315.60 Inc. VAT	

- Exposed Round Thermostatic Bar Valve with Diverter
- Adjustable Rigid Riser Rail with Round Rainfall Shower Head

Roma Round Thermostatic Bar Valve & Riser Kit
Min. Pressure Req. - 0.5 bar

Ref: QXSH104MG	
Finish: Matt Grey	
Height: 870 - 1200mm	
£273.00 Exc. VAT	
£327.60 Inc. VAT	

- Round Shower Handset
- WRAS Approved
- TMV2

Nostalgic Valves

Traditional Thermostatic Shower Valves & Kits in Black & White Finishes

2 YEAR MANUFACTURERS GUARANTEE

Both Black & White Handle Options Supplied

Nostalgic Traditional Twin Thermostatic Concealed Shower Valve *(Controls 1 function)*

Min. Pressure Req. - 0.2 bar

Ref: NOSCON1 Finish: Chrome

Dimensions: 210 x 130mm

£226.00 Exc. VAT **£271.20 Inc. VAT**

Only £674.40 Inc. VAT

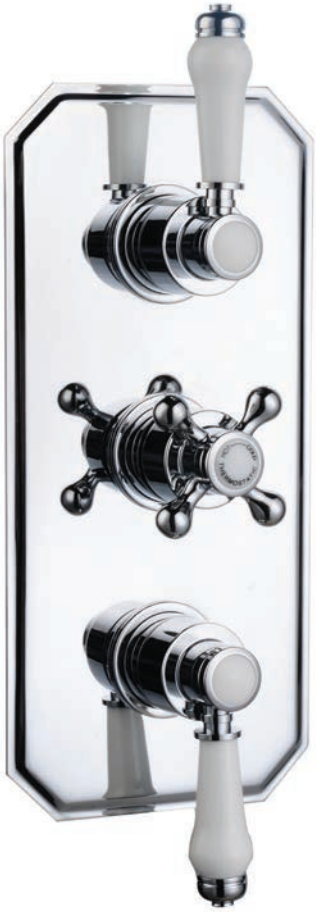

Both Black & White Handle Options Supplied

Nostalgic Traditional Triple Thermostatic Concealed Shower Valve *(Controls 2 functions simultaneously)*

Min. Pressure Req. - 0.2 bar

Ref: NOSCON2 Finish: Chrome

Dimensions: 280 x 130mm

£314.00 Exc. VAT **£376.80 Inc. VAT**

Nostalgic Thermostatic Valve & Rigid Riser Kit - Black Handles

Min. Pressure Req. - 0.2 bar

Ref: NOSKITB Finish: Chrome/Black

Dimensions: 1220mm High

£562.00 Exc. VAT **£674.40 Inc. VAT**

Nostalgic Thermostatic Valve & Rigid Riser Kit - White Handles

Min. Pressure Req. - 0.2 bar

Ref: NOSKITW Finish: Chrome/White

Dimensions: 1220mm High

£562.00 Exc. VAT **£674.40 Inc. VAT**

Nostalgic Valves

Traditional Thermostatic Shower Valves & Kits in Black & White Finishes

Both Black & White Handle Options Supplied

Nostalgic Traditional Thermostatic Exposed Shower Valve *(Controls 1 function)*

Min. Pressure Req. - 0.2 bar

Ref: NOSEXP1 Finish: Chrome

Dimensions: 150mm Centres

£286.00 Exc. VAT **£343.20 Inc. VAT**

For Use with Nostalgic Exposed Valve

Nostalgic Traditional Rigid Riser Kit including Bar, Fixed Arm & Shower Head

Ref: NOS-RAIL Finish: Chrome

Height: 1000mm

£192.00 Exc. VAT **£230.40 Inc. VAT**

For Use with Nostalgic Concealed Valve

Nostalgic Traditional Shower Head

Ref: NOS-HEAD Finish: Chrome

Height: 207mm Diameter

£61.00 Exc. VAT **£73.20 Inc. VAT**

Shower Head Fixing Arm

Ref: FLS-801C Finish: Chrome

Height: 400 x 24mm

£47.00 Exc. VAT **£56.40 Inc. VAT**

Nostalgic White Traditional Riser Kit Only

Ref: SH901CP Finish: Chrome/White

Height: 760mm

£109.00 Exc. VAT **£130.80 Inc. VAT**

Nostalgic Black Traditional Riser Kit Only

Ref: NOS-29CPB Finish: Chrome/Black

Height: 760mm

£103.00 Exc. VAT **£123.60 Inc. VAT**

NOTE: If using with Nostalgic Exposed Valve detailed above, an adapter is required:

Shower Valve Adapter - ¾" to ½"

Ref: ADAPT Finish: Chrome

£2.00 Exc. VAT **£2.40 Inc. VAT**

Gemini & Rimini Valves

Gemini & Rimini Shower Valves Require Min. 0.5 Bar Pressure

2 YEAR MANUFACTURERS GUARANTEE

Gemini Square Single Thermostatic Push-Button Shower Valve
(Controls 1 function)

Ref: GEMPB1 Finish: Chrome

Dimensions: 215 x 120mm

£232.00 Exc. VAT **£278.40 Inc. VAT**

Rimini Round Single Thermostatic Push-Button Shower Valve
(Controls 1 function)

Ref: RIMPB1 Finish: Chrome

Dimensions: 215 x 120mm

£219.00 Exc. VAT **£262.80 Inc. VAT**

Gemini Square Twin Thermostatic Push-Button Shower Valve
(Controls 2 functions)

Ref: GEMPB2 Finish: Chrome

Dimensions: 215 x 120mm

£263.00 Exc. VAT **£315.60 Inc. VAT**

Rimini Round Twin Thermostatic Push-Button Shower Valve
(Controls 2 functions)

Ref: RIMPB2 Finish: Chrome

Dimensions: 215 x 120mm

£248.00 Exc. VAT **£297.60 Inc. VAT**

Gemini Square Triple Thermostatic Push-Button Shower Valve
(Controls 3 functions)

Ref: GEMPB3 Finish: Chrome

Dimensions: 305 x 120mm

£314.00 Exc. VAT **£376.80 Inc. VAT**

Rimini Round Triple Thermostatic Push-Button Shower Valve
(Controls 3 functions)

Ref: RIMPB3 Finish: Chrome

Dimensions: 305 x 120mm

£292.00 Exc. VAT **£350.40 Inc. VAT**

Ebony & Utah Valves

Manual Shower Valves in Chrome and Matt Black Finishes

Ebony Square Twin Thermostatic Shower Valve *(Controls 1 function)*
Ref: EB-SQR-2X1W Finish: Chrome
Dimensions: 215 x 120mm
£189.00 Exc. VAT **£226.80 Inc. VAT**

Ebony Square Twin Thermostatic Shower Valve *(Controls 2 functions)*
Ref: EB-SQR-2X2W Finish: Chrome
Dimensions: 215 x 120mm
£200.00 Exc. VAT **£240.00 Inc. VAT**

Ebony Square Triple Thermostatic Shower Valve *(Controls 2 functions simultaneously)*
Ref: EB-SQR-3X2W Finish: Chrome
Dimensions: 265 x 120mm
£270.00 Exc. VAT **£324.00 Inc. VAT**

Ebony Round Twin Thermostatic Shower Valve *(Controls 1 function)*
Ref: EB-RND-2X1W Finish: Chrome
Dimensions: 215 x 120mm
£189.00 Exc. VAT **£226.80 Inc. VAT**

Ebony Round Twin Thermostatic Shower Valve *(Controls 2 functions)*
Ref: EB-RND-2X2W Finish: Chrome
Dimensions: 215 x 120mm
£200.00 Exc. VAT **£240.00 Inc. VAT**

Ebony Round Triple Thermostatic Shower Valve *(Controls 2 functions simultaneously)*
Ref: EB-RND-3X2W Finish: Chrome
Dimensions: 280 x 120mm
£270.00 Exc. VAT **£324.00 Inc. VAT**

Ebony Traditional Valves are supplied with both Black & White Inserts

Ebony Traditional Twin Thermostatic Shower Valve *(Controls 1 function)*
Ref: EB-TRA-2X1W Finish: Chrome
Dimensions: 215 x 120mm
£202.00 Exc. VAT **£242.40 Inc. VAT**

Ebony Traditional Triple Thermostatic Shower Valve *(Controls 2 functions simultaneously)*
Ref: EB-TRA-3X2W Finish: Chrome
Dimensions: 265 x 120mm
£282.00 Exc. VAT **£338.40 Inc. VAT**

Utah Square

Utah Round Twin Thermostatic Shower Valve *(Controls 2 functions)*
Ref: QXCVQ03K Finish: Matt Black
Dimensions: 210 x 130mm
£252.00 Exc. VAT **£302.40 Inc. VAT**

Min. Pressure Req. - 0.5 bar

Utah Square Twin Thermostatic Shower Valve *(Controls 2 functions)*
Ref: QXCVQ04K Finish: Matt Black
Dimensions: 210 x 130mm
£252.00 Exc. VAT **£302.40 Inc. VAT**

Min. Pressure Req. - 0.5 bar

Utah Round

Utah Round Triple Thermostatic Shower Valve *(Controls 2 functions simultaneously)*
Ref: QXCVQ10K Finish: Matt Black
Dimensions: 285 x 130mm
£292.00 Exc. VAT **£350.40 Inc. VAT**

Min. Pressure Req. - 0.5 bar

Utah Square Triple Thermostatic Shower Valve *(Controls 2 functions simultaneously)*
Ref: QXCVQ11K Finish: Matt Black
Dimensions: 285 x 130mm
£292.00 Exc. VAT **£350.40 Inc. VAT**

Min. Pressure Req. - 0.5 bar

Concealed & Exposed Valves

5 YEAR MANUFACTURERS GUARANTEE

Manual & Thermostatic Shower Valve Options - Including Exposed Bar Valves

Low Pressure

Grosvenor Manual Shower Valve
Min. Pressure Req. - 0.2 bar
Ref: GR-CON1 Finish: Chrome
Dimensions: 110 x 110mm
£86.00 Exc. VAT **£103.20 Inc. VAT**

Low Pressure

Grosvenor Manual Shower Valve with Diverter
Min. Pressure Req. - 0.2 bar
Ref: GR-CON2 Finish: Chrome
Dimensions: 120 x 150mm
£93.00 Exc. VAT **£111.60 Inc. VAT**

Low Pressure

Opal Manual Shower Valve
Min. Pressure Req. - 0.2 bar
Ref: OP-CON1 Finish: Chrome
Dimensions: 120mm Diameter
£77.00 Exc. VAT **£92.40 Inc. VAT**

Low Pressure

Opal Manual Shower Valve with Diverter
Min. Pressure Req. - 0.2 bar
Ref: OP-CON2 Finish: Chrome
Dimensions: 150mm Diameter
£93.00 Exc. VAT **£111.60 Inc. VAT**

High Pressure

Genesis Square Manual Shower Valve*
Min. Pressure Req. - 1.5 bar
Ref: ASCOT05 Finish: Chrome
Dimensions: 110 x 110mm
£57.00 Exc. VAT **£68.40 Inc. VAT**

**While Stocks Last*

WRAS APPROVED PRODUCT

TMV 2 SCHEME

Ohio Thermostatic Bar Valve Only
Min. Pressure Req. - 1 bar
Ref: ASC-8088 Finish: Chrome
£106.00 Exc. VAT **£127.20 Inc. VAT**

Nevada Square Thermostatic Bar Valve Only
Min. Pressure Req. - 1 bar
Ref: ASC-80814 Finish: Chrome
£113.00 Exc. VAT **£135.60 Inc. VAT**

Charlotte Thermostatic Bar Valve Only
Min. Pressure Req. - 0.2 bar
Ref: CH-LY-35A Finish: Chrome
£223.00 Exc. VAT **£267.60 Inc. VAT**

Depth: 57.5mm to allow for storage of shampoo etc.

Thermostatic Valves

Thermostatic Bath Shower Mixers & Concealed Valve & Handset Kits

Extended Height Nevada Rigid Riser For use with Thermostatic Bath Shower Mixer
Min. Pressure Req. - 1 bar
Overall Height: 1100 - 1550mm
Ref: S2014A Finish: Chrome
£138.00 Exc. VAT **£165.60 Inc. VAT**

Nevada Square Thermostatic Bar Bath Shower Mixer
Min. Pressure Req. - 1 bar
Ref: ASC-80821 Finish: Chrome
£140.00 Exc. VAT **£168.00 Inc. VAT**

Ohio Round Thermostatic Bar Bath Shower Mixer
Min. Pressure Req. - 1 bar
Ref: ASC-8085 Finish: Chrome
£154.00 Exc. VAT **£184.80 Inc. VAT**

Concealed Shower Valve and Handset Kit - Chrome Finish

A versatile twin outlet Shower Valve INCLUDING Handset, that gives you the option of adding either a Wall-Mounted Bath Filler OR a Fixed Overhead Shower of your choice. Available with your choice of Nevada Square or Ohio Round Handles.

Nevada Square Valve & Handset
Ref: QXBL02W
£299.00 Exc. VAT
£358.80 Inc. VAT

Ohio Round Valve & Handset
Ref: QXORB2W
£274.00 Exc. VAT
£328.80 Inc. VAT

Nevada Square Bath Spout
Valve Ref: QXBLOBS
£48.00 Exc. VAT
£57.60 Inc. VAT

Ohio Round Bath Spout
Valve Ref: QXORDBS
£48.00 Exc. VAT
£57.60 Inc. VAT

Ascent Shower Kits

Shower Kits include Slide Bar, Handset & Hose

2 YEAR MANUFACTURERS GUARANTEE

Nevada Shower Kit inc. Slide Bar, Handset & Hose
Min. Pressure Req. - 0.2 bar
Material: Plastic
Ref: NEVSQ
Finish: Chrome
Height: 701mm
£32.00 Exc. VAT
£38.40 Inc. VAT

Square Shower Kit inc. Slide Bar, Handset & Hose
Min. Pressure Req. - 0.1 bar
Material: Brass
Ref: ASSQKIT
Finish: Chrome
Height: 688mm
£131.00 Exc. VAT
£157.20 Inc. VAT

Nevada Shower Kit inc. Slide Bar, Handset & Hose
Min. Pressure Req. - 0.1 bar
Ref: SH903
Finish: Chrome
Height: 665mm
£118.00 Exc. VAT
£141.60 Inc. VAT

Nevada Shower Kit inc. Slide Bar, Handset, Hose & Inlet
Min. Pressure Req. - 0.1 bar
Ref: QXRK007
Finish: Chrome
Height: 700mm
£145.00 Exc. VAT
£174.00 Inc. VAT

Ohio Round Shower Kit inc. Slide Bar, Handset, Hose & Soap Dish *Min. Pressure Req. - 0.2 bar*
Ref: OH-14
Finish: Chrome
Height: 650mm
£31.00 Exc. VAT
£37.20 Inc. VAT

Ohio Rainfall Shower Kit inc. Slide Bar, Handset, Hose & Soap Dish
Min. Pressure Req. - 0.1 bar
Ref: SH906
Finish: Chrome
Height: 750mm
£55.00 Exc. VAT
£66.00 Inc. VAT

Ohio Slim Shower Kit inc. Slide Bar, Handset & Hose
Min. Pressure Req. - 0.2 bar
Material: Plastic
Ref: OH-SL09
Finish: Chrome
Height: 664mm
£36.00 Exc. VAT
£43.20 Inc. VAT

Ohio Minimalist Shower Kit inc. Slide Bar, Handset & Hose
Min. Pressure Req. - 0.1 bar
Material: Brass
Ref: QXRK002
Finish: Chrome
Height: 600mm
£108.00 Exc. VAT
£129.60 Inc. VAT

Utah Round Shower Kit inc. Slide Bar, Handset & Hose
Min. Pressure Req. - 0.2
Ref: QXSR04K
Finish: Matt Black
Height: 806mm
£129.00 Exc. VAT
£154.80 Inc. VAT

Utah Square Shower Kit inc. Slide Bar, Handset & Hose
Min. Pressure Req. - 0.2
Ref: QXSR03AK
Finish: Matt Black
Height: 806mm
£166.00 Exc. VAT
£199.20 Inc. VAT

Ascent Shower Heads

Shower Head Options - Can be used with your choice of Shower Valve

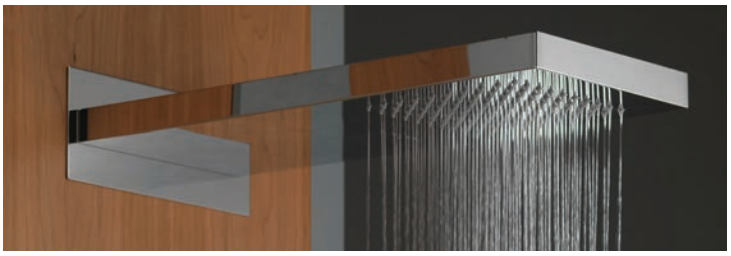

Nevada Rainfall Shower Head

Ref.	Dimensions	Finish	Exc. VAT	Inc. VAT
FLS-8110A	500 x 200mm	Chrome	£235.00	**£282.00**

Nevada Rainfall & Waterfall Shower Head

Ref.	Dimensions	Finish	Exc. VAT	Inc. VAT
FLS-8110B	500 x 200mm	Chrome	£249.00	**£298.80**

Nevada Slim Rainfall & Waterfall Shower Head

Ref.	Dimensions	Finish	Exc. VAT	Inc. VAT
FLS-8108A	500 x 250mm	Chrome	£274.00	**£328.80**

Ohio Slim Rainfall Shower Head

Ref.	Dimensions	Finish	Exc. VAT	Inc. VAT
FLS-8108D	500 x 250mm	Chrome	£265.00	**£318.00**

Nevada Square Shower Head & Wall Fixing Arm

	Ref.	Dimensions	Finish	Exc. VAT	Inc. VAT
Shower Head	FLS-8001C	200 x 200mm	Chrome	£64.00	**£76.80**
Wall Arm	FLS-801-2F	400 x 24mm	Chrome	£52.00	**£62.40**

Ohio Round Shower Head & Wall Fixing Arm

	Ref.	Dimensions	Finish	Exc. VAT	Inc. VAT
Shower Head	FLS-8002C	200mm	Chrome	£56.00	**£67.20**
Wall Arm	FLS-801C	400 x 24mm	Chrome	£47.00	**£56.40**

Utah Square Shower Head & Wall Fixing Arm

	Ref.	Dimensions	Finish	Exc. VAT	Inc. VAT
Shower Head	QXSHD2525BK	250mm	Matt Black	£80.00	**£96.00**
Wall Arm	QXSA02K	300mm	Matt Black	£58.00	**£69.60**

Utah Round Shower Head & Wall Fixing Arm

	Ref.	Dimensions	Finish	Exc. VAT	Inc. VAT
Shower Head	QXSHE2525BK	250mm	Matt Black	£74.00	**£88.80**
Wall Arm	QXSA01K	300mm	Matt Black	£34.00	**£40.80**

Utah Square Shower Head & Ceiling Fixing Arm

	Ref.	Dimensions	Finish	Exc. VAT	Inc. VAT
Shower Head	QXSHD2525BK	250mm	Matt Black	£80.00	**£96.00**
Ceiling Arm	QXSA04K	120mm	Matt Black	£36.00	**£43.20**

Utah Round Shower Head & Ceiling Fixing Arm

	Ref.	Dimensions	Finish	Exc. VAT	Inc. VAT
Shower Head	QXSHE2525BK	250mm	Matt Black	£74.00	**£88.80**
Ceiling Arm	QXSA03K	120mm	Matt Black	£27.00	**£32.40**

Ascent Shower Heads

2 YEAR MANUFACTURERS GUARANTEE

Shower Head Options - Can be used with your choice of Shower Valve

Nevada Large Square Shower Head & Fixing Arm Options

	Ref.	Dimensions	Finish	Exc. VAT	Inc. VAT
Shower Head	FLS-8007C	300 x 300mm	Chrome	£157.00	**£188.40**
Nevada Square Ceiling Arm *- Not Pictured*	QXSA04	120mm	Chrome	£31.00	**£37.20**
Wall Arm	FLS-801-2F	400 x 24mm	Chrome	£52.00	**£62.40**

Nevada Rectangular Shower Head & Fixing Arm Options

	Ref.	Dimensions	Finish	Exc. VAT	Inc. VAT
Shower Head	FLS-8003C	300 x 450mm	Chrome	£148.00	**£177.60**
Ohio Round Ceiling Arm	QXSA03	120mm	Chrome	£26.00	**£31.20**
Wall Arm	FLS-801-2F	400 x 24mm	Chrome	£52.00	**£62.40**

Nostalgic Traditional Shower Head
Ref: NOS-HEAD Finish: Chrome
Height: 207mm Diameter
£61.00 Exc. VAT **£73.20** Inc. VAT

Ohio Wall Mounting Arm
Dimensions: 400 x 24mm
Ref: FLS-801C Finish: Chrome
£47.00 Exc. VAT **£56.40** Inc. VAT

Chrome Handsets *Min. Pressure Req. - 0.1 bar*	Ref.	Exc. VAT	Inc. VAT
1. Ohio Round Handset, Hose & Wall Bracket	ASC-070	£32.00	**£38.40**
2. Nevada Square Handset, Hose & Wall Bracket	ASC-074	£32.00	**£38.40**
3. Ohio Round Handset, Hose & Deck-Mounting Socket	ASC-075	£70.00	**£84.00**
4. Nevada Square Handset, Hose & Deck-Mounting Socket	ASC-078	£75.00	**£90.00**

Nevada Square Body Jet
50mm *Req. 0.2 bar*
Ref: NEV500 Finish: Chrome
£24.00 Exc. VAT **£28.80** Inc. VAT

Ohio Round Body Jet
50mm *Req. 0.2 bar*
Ref: OH-516 Finish: Chrome
£23.00 Exc. VAT **£27.60** Inc. VAT

1.5 Meter Shower Hose
Ref: AC003CP Finish: Chrome
£12.00 Exc. VAT **£14.40** Inc. VAT

Nevada Square Outlet Elbow *Req. 0.1 bar*
Ref: P652 Finish: Chrome
£22.00 Exc. VAT
£26.40 Inc. VAT

Ohio Round Outlet Elbow *Req. 0.1 bar*
Ref: P653 Finish: Chrome
£14.00 Exc. VAT
£16.80 Inc. VAT

1/2" BSP Isolating Valve *Req. 0.5 bar*
Ref: QXDC83 Finish: Chrome
£13.00 Exc. VAT
£15.60 Inc. VAT

Ohio Round Outlet Elbow & Handset Holder *Req. 0.1 bar*
Ref: P800 Finish: Chrome
£16.00 Exc. VAT
£19.20 Inc. VAT

Nevada Square Outlet Elbow & Handset Holder *Req. 0.1 bar*
Ref: P803 Finish: Chrome
£16.00 Exc. VAT
£19.20 Inc. VAT

Monza Shower Column

Monza Shower Column
Min. Pressure Req. - 2.0 bar
Dimensions: 1200mm (H) x 150mm (W)

800mm Depth - *Glass Fitted at 775mm Depth*
Ref: SO2800
£721.00 Exc. VAT **£865.20 Inc. VAT**

900mm Depth - *Glass Fitted at 875mm Depth*
Ref: SO2900
£793.00 Exc. VAT **£951.60 Inc. VAT**

1200mm Depth - *Glass Fitted at 1175mm Depth*
Ref: SO21200
£748.00 Exc. VAT **£897.60 Inc. VAT**

- 3 Depth Options
- Stainless Steel Mirror Finish
- Rainfall Shower Head
- Handheld Shower Spray
- 2 x Body Jets
- Shampoo Shelf
- Thermostatic
- Adjustment - Overall depth can be **increased** by 50mm but cannot be decreased

Utah Column

Matt Black Shower Column with Bodyjets

Utah Shower Column
Min. Pressure Req. - 2.0 bar

Ref: GS011	Finish: Matt Black
Dimensions: 1400 x 200mm	
£630.00 Exc. VAT	**£756.00 Inc. VAT**

- Stainless Steel in Matt Black Finish
- Round Rain Shower Head
- 4 x Bodyjets
- Includes Shower Handset & Hose

Brescia Column

Modern Stainless Steel Shower Column

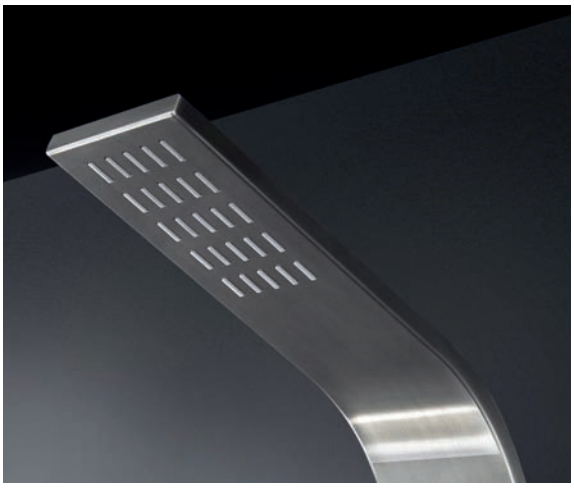

Brescia Shower Column
Min. Pressure Req. - 2.0 bar

Ref: S205-1	Finish: Stainless Steel
Dimensions: 1100 x 130mm	
£404.00 Exc. VAT	**£484.80 Inc. VAT**

- Stainless Steel Finish
- Curved Rainfall Shower Head
- Includes Shower Handset & Hose
- 2 x Body Jets

Ohio & Nevada Columns

Thermostatic Shower Columns with Body Jets & Waterfall Shower Spout

Ohio Shower Column
Min. Pressure Req. - 2.0 bar
Ref: FLS-1303-4 Finish: Chrome
Dimensions: 1500 x 200mm
£471.00 Exc. VAT **£565.20 Inc. VAT**

- Rainfall Shower Head
- Waterfall Spout
- Shower Handset & Hose
- 4 Round Body Jets
- Circular Handspray - *Concealed on the side of the column*
- Thermostatic

Nevada Shower Column
Min. Pressure Req. - 2.0 bar
Ref: FLS-1303-3 Finish: Chrome
Dimensions: 1500 x 200mm
£471.00 Exc. VAT **£565.20 Inc. VAT**

- Rainfall Shower Head
- Waterfall Spout
- Shower Handset & Hose
- 4 Square Body Jets
- Circular Handspray
- Thermostatic

Verona Columns

Modern Thermostatic Shower Columns in Black and Stainless Steel Finishes

Corner Application

- Available in Black or Stainless Steel Finish
- Slimline Rainfall Shower Head
- Includes Shower Handset & Hose
- Integrated Body Jets
- Can be installed on a flat wall (above) or in a corner application (see left)
- Thermostatic

Verona Shower Column
Min. Pressure Req. - 3.0 bar

Ref: FLS-1603 Finish: Stainless Steel
Dimensions: 1104 x 200mm
£503.00 Exc. VAT **£603.60 Inc. VAT**

Ref: FLS-1622 Finish: Black
Dimensions: 1104 x 200mm
£486.00 Exc. VAT **£583.20 Inc. VAT**

Venetian Column

Black Shower Column with Stainless Steel Inset

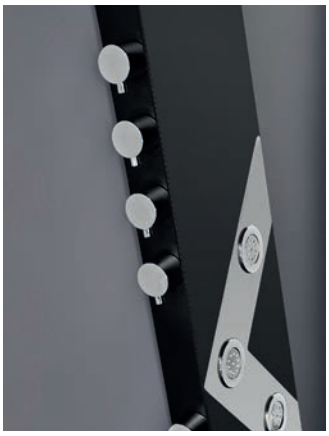

Venetian Shower Column
Min. Pressure Req. - 2.0 bar

Ref: A216-1CTH	Finish: Black
Dimensions: 1600 x 220mm	
£811.00 Exc. VAT	**£973.20 Inc. VAT**

- Black Finish with Stainless Steel Inset Detail
- Curved Rainfall Shower Head
- Waterfall Spout
- Includes Shower Handset & Hose
- 3 x Bodyjets
- Thermostatic

Bologna & Milan Columns

Stainless Steel Shower Columns with Recessed Handset

Bologna Shower Column
Min. Pressure Req. - 2.0 bar
Ref: S300-3C Finish: Stainless Steel
Dimensions: 1120 x 130mm
£485.00 Exc. VAT **£582.00 Inc. VAT**

- Stainless Steel Finish
- Curved Shower Head
- Includes Shower Handset & Hose
- Handset Recesses into Column

Milan Shower Column
Min. Pressure Req. - 2.0 bar
Ref: S300-2TH Finish: Stainless Steel
Dimensions: 1120 x 130mm
£644.00 Exc. VAT **£772.80 Inc. VAT**

- Stainless Steel Finish
- Square Rainfall Shower Head
- Includes Shower Handset & Hose
- Handset Recesses into Column
- 2 x Bodyjets
- Thermostatic

Florence Column

Sleek White Shower Column with Waterfall Spout

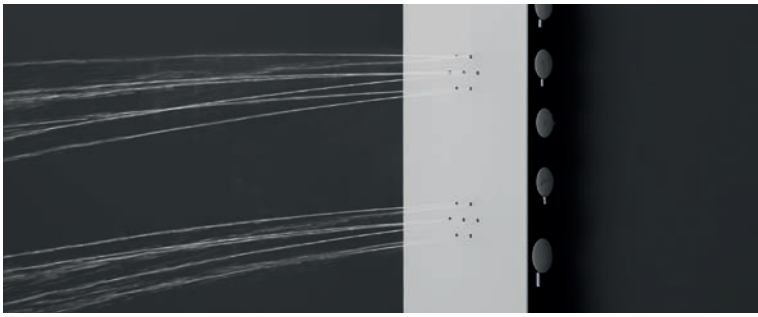

Florence Shower Column
Min. Pressure Req. - 2.0 bar

Ref: A051-1TH Finish: White
Dimensions: 1400 x 220mm
£670.00 Exc. VAT **£804.00 Inc. VAT**

- White Finish
- Integrated Rainfall Shower Head
- Includes Shower Handset & Hose
- Integrated Body Jets
- Waterfall Spout
- Thermostatic

Nevada Shower Panel

The Nevada Shower Panel is designed to be recessed into the wall

Nevada Recessed Shower Panel
Min. Pressure Req. - 2.0 bar

Ref: FLS-1508 Finish: Chrome
Dimensions: 1000 x 200mm
£765.00 Exc. VAT **£918.00 Inc. VAT**

- **MUST** be recessed into the wall
- Shower Handset & Hose
- 4 Round Body Jets
- Can be used with your choice of Overhead Shower

Nevada Shower Panel has 1 Temperature Control and 4 Water Outlets. 1 for Body Jets, 1 for Shower Handset and the other 2 are spare for use with Shower Heads or Bath Fillers, as required

Shown With:

Nevada Slim Rainfall & Waterfall Shower Head

Dimensions: 500 x 250mm
Ref: FLS-8108A Finish: Chrome
£274.00 Exc. VAT **£328.80 Inc. VAT**

Also Available:

Ohio Slim Rainfall Shower Head

Dimensions: 500 x 250mm
Ref: FLS-8108D Finish: Chrome
£265.00 Exc. VAT **£318.00 Inc. VAT**

Wall Panelling

Including 10mm PVC & 11mm MDF Bathroom/Shower Panels

10 YEAR MANUFACTURERS GUARANTEE

Alpha 10mm thick PVC Wall Panels provide a cost effective panelling solution, in 8 colour options.

Panels are tongue & groove and available in 2400mm height / 1000mm width, but can also be cut to size, which allows for easy installation in a variety of situations, room sizes and are well suited for shower enclosures.

Quest 11mm thick MDF Wall Panels are a fantastic alternative to ceramic tiling - it's quick to install and maintenance free, with no grouting or mould growth and is available in a choice of 17 colours.

All panels are available in 2400mm height and 1200mm width. A selected number of boards are also available in 900mm width. Panels can be cut on site to suit a variety of installations with the cut edges always hidden within the silver aluminium end or corner profiles. Several finishes are also available Tongue & Groove

Manufacturers Guarantees: • Alpha - 3 Years • Quest - 10 Years

Quest Wall Panelling

Bathroom/Shower Panels - 11mm Overall Thickness with High -Performance MDF Core

Straight Edge Boards

900mm Boards

£241.00 Exc. VAT £289.20 Inc. VAT

1200mm Boards

£274.00 Exc. VAT £328.80 Inc. VAT

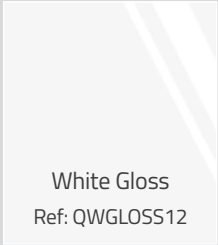

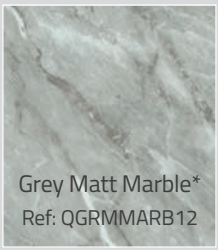

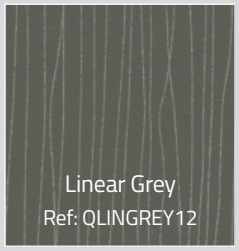

Installation

- Panels can be installed over any existing wall finish, providing it is in a sound and dry condition. Panels are quickly fixed using a high grab adhesive, which will adhere to plasterboard, ceramic tiles and other existing finishes.
- Where the wall is damaged or out of true, it may be necessary to first install battens at 300mm vertical or horizontal centres, which can be used to fix the panels.
- Shower enclosures should be fixed directly to the panels using silicone and the recommended fixings so that the panels extend to the full height of the shower and beyond that actual width of the enclosure.

Quest Wall Panelling

Bathroom/Shower Panels - 11mm Overall Thickness with High -Performance MDF Core

Tongue & Groove Boards

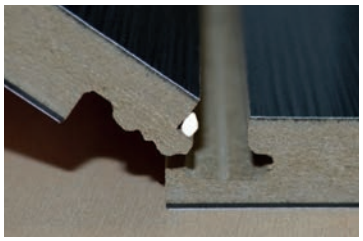
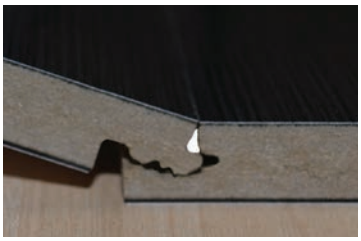

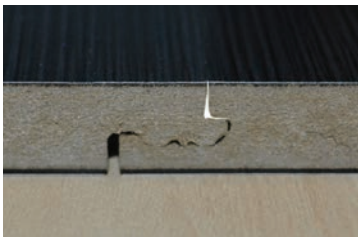

900mm Boards

£256.00 Exc. VAT £307.20 Inc. VAT

White Gloss*
Ref: QWGLOSS9T&G

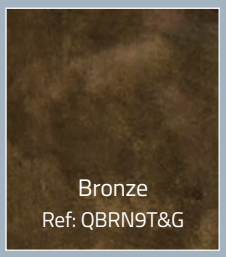
Bronze
Ref: QBRN9T&G

Grey Matt Marble*
Ref: QGMARB9T&G

Grey Stone
Ref: QGSTON9T&G

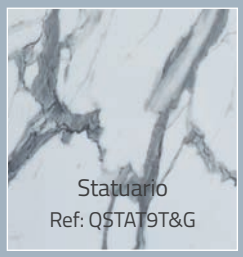
Statuario
Ref: QSTAT9T&G

Italian Marble
Ref: QIMARB9T&G

1200mm Boards

£289.00 Exc. VAT £349.80 Inc. VAT

White Gloss
Ref: QWGLOSS12T&G

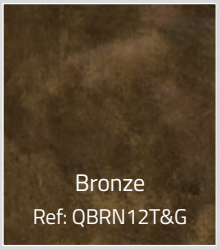
Bronze
Ref: QBRN12T&G

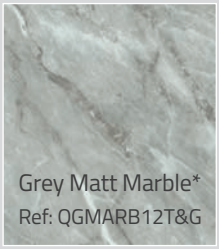
Grey Matt Marble*
Ref: QGMARB12T&G

Grey Stone
Ref: QGSTON12T&G

Statuario
Ref: QSTAT12T&G

Italian Marble
Ref: QIMARB12T&G

Quest Profiles

Aluminium with Chrome Finish

Profile	Dimensions	Exc. VAT	Inc. VAT
Continuous Joint	2400mm	£25.00	£30.00
End Cap	2400mm	£23.00	£27.60
External Corner	2400mm	£33.00	£39.60
Internal Corner	2400mm	£33.00	£39.60
Foot Finishing Trim	2400mm	£23.00	£27.60

	Exc. VAT	Inc. VAT
Quest 2-in-1 Sealant & Adhesive (Clear or White* - 300ml)	£15.00	£18.00

**While Stocks Last*

Continuous Joint

End Cap

External Corner

Internal Corner

Foot Finishing Trim

Alpha Wall Panelling

10mm Thick PVC Bathroom/Shower Panels - Tongue & Groove

Price Band A

Price Band B

Board	Dimensions (WxHxD)	Exc. VAT	Inc. VAT
Price Band A	1000 x 2400 x 10mm	£95.00	£114.00
Price Band B	1000 x 2400 x 10mm	£109.00	£130.80
Profiles - Chrome			
External Corner	2400mm Long	£12.00	£14.40
Internal Corner	2400mm Long	£12.00	£14.40
End Trim	2400mm Long	£9.00	£10.80
Continuous 'H' Joint	2400mm Long	£11.00	£13.20

Profile Options

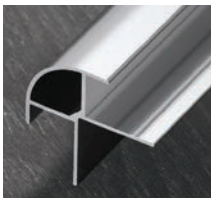
External Corner

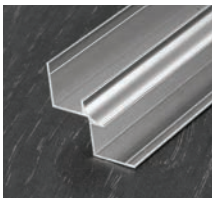
Internal Corner

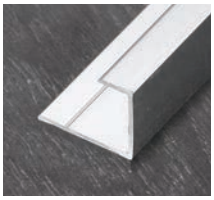
End Cap

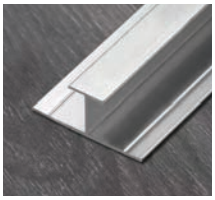
Continuous 'H' Joint

Furniture

Should you desire the pristine gleam of high gloss white, or the warmth of natural wood finishes, our ranges of Bathroom Furniture bring together both form and functionality to assist you in creating the bathroom of your dreams.

Our Genesis Q-Line Modular furniture provides a vast range of possibilities for bathrooms of any shape or size. This versatile range accommodates most ceramic semi-recessed basins and back-to-wall pans, as well as those featured from our QX range, the Q-Line Linear Style and 1-Piece Basin options. Genesis Q-Line offers a solution for every bathroom with choices of function, width, depth, finish and handles and is now available in Platinum Grey finish.

The popular Urban range continues to offer a comprehensive choice of base unit styles, colours and sizes. The Rimini and Stamford units offer a modern twist on traditional designs and are available in a choice of popular colour options, including Platinum Grey.

With an ever-increasing demand for black finishes within the bathroom setting we are introducing to the market the NEW Geo furniture. With its Geometric drawer front design, it provides a modern yet distinguished feel, and has the option of two different basin designs.

Both the Porto and Pisa are great examples of black furniture working within the bathroom environment. The freestanding WC unit within this range and the additional WC storage unit above, creates a unique and elegant look.

Following on from the success of the Naxos furniture, with its linear design, we launch the NEW Evora floorstanding base units. With a uniform linear pattern on both carcass and door fronts, the Evora provides a very striking finish, with the option to pair with either the already established Radius or Domino basins.

The options for the Radius and Domino basins have been further extended with the introduction of the NEW Sintra 60 base unit. Available in High Gloss White, the Sintra offers a base unit similar to that of the very popular Eden and Monica ranges, but has a depth (395mm) that sits between the two.

Our choices of colours, basins and size options across our furniture offering is unparalleled.

Naxos 60

Available in Matt White and Dark Indigo Finishes with Brushed Brass Handles

Naxos 60 Combination in Matt White Finish

Naxos 60 Combination	Dimensions	Matt White Ref.	Dark Indigo Ref.	Exc. VAT	Inc. VAT
Naxos 60 1-Drawer Base Unit	600 x 390 x 400mm	NX60MW	NX60DI	£428.00	**£513.60**
Naxos 60 Basin	610 x 390mm	NX60BAS	NX60BAS	£103.00	**£123.60**
Naxos 60 Combination Total				**£531.00**	**£637.20**
Also Shown With:					
Naxos 35 1-Door Mid-Height Column	350 x 353 x 1200mm	NX35COLMW	NX35COLDI	£504.00	**£604.80**
Atlanta Basin Mono - Brushed Brass	-	BC-6922BB	BC-6922BB	£100.00	**£120.00**
Rimini Rimless Back-to-Wall Pan	-	RIM-43BTW	RIM-43BTW	£267.00	**£320.00**
Cornell Mirror with LED Lights	600 x 700mm	ASC12338	ASC12338	£195.00	**£234.00**

Naxos 60

Available with optional Column

10 YEAR MANUFACTURERS GUARANTEE

Naxos 60 Combination in Dark Indigo Finish

Naxos 60 Combination	Dimensions	Matt White Ref.	Dark Indigo Ref.	Exc. VAT	Inc. VAT
Naxos 60 1-Drawer Base Unit	600 x 390 x 400mm	NX60MW	NX60DI	£428.00	**£513.60**
Naxos 60 Basin	610 x 390mm	NX60BAS	NX60BAS	£103.00	**£123.60**
Naxos 60 Combination Total				**£531.00**	**£637.20**
Also Shown With:					
Naxos 35 1-Door Mid-Height Column	350 x 353 x 1200mm	NX35COLMW	NX35COLDI	£504.00	**£604.80**
Atlanta Basin Mono - Brushed Brass	-	BC-6922BB	BC-6922BB	£100.00	**£120.00**
Rimini Rimless Back-to-Wall Pan	-	RIM-43BTW	RIM-43BTW	£267.00	**£320.00**
Radius Round Mirror with LED Light	600mm Round	ASC6602	ASC6602	£243.00	**£292.00**

Vienna 60 & 80

Matching WC Unit, Mirrored Cabinet & Column Option Available

Vienna 60 Combination pictured with the Vienna Mirrored Cabinet, WC Base Unit & Tall Column

Ash Grain Indigo

Vienna 60 Combination	Dimensions	Ref.	Exc. VAT	Inc. VAT
Vienna 60 2-Drawer Wall-Hung Base Unit	600 x 445 x 580mm	VIE60B	£726.00	**£871.20**
Arizona 60 Ceramic Basin	610 x 460mm	AR60BAS	£95.00	**£114.00**
Vienna 60 Combination Total			**£821.00**	**£985.20**

Vienna 80 Combination	Dimensions	Ref.	Exc. VAT	Inc. VAT
Vienna 80 2-Drawer Wall-Hung Base Unit	795 x 445 x 580mm	VIE80B	£885.00	**£1,062.00**
Arizona 80 Ceramic Basin	800 x 450mm	AR80BAS	£139.00	**£167.00**
Vienna 80 Combination Total			**£1,024.00**	**£1,228.80**

Also Shown With:				
Vienna 60 WC Base Unit	604 x 224 x 853mm	VIE60WC	£350.00	**£420.00**
Vienna 60 2-Door Mirrored Cabinet	650 x 145 x 590mm	VIEMC	£431.00	**£517.20**
Vienna 40 1-Door Tall Column	406 x 300 x 1382mm	VIECOL	£771.00	**£925.20**
Grosvenor Back-to-Wall Pan	-	GR-W212	£191.00	**£229.00**
Nostalgic Wooden WC Seat - Indigo Finish	-	NOS-SEAT	£135.00	**£162.00**

Vienna 60 & 80

The Colour-Matched Vienna Worktop gives you the versatility to create a Counter-Top Furniture Combination with your choice of Vanity Basin

Ash Grain Indigo

Vienna 80 Combination - Nostalgic Basin	Dimensions	Ref.	Exc. VAT	Inc. VAT
Vienna 80 2-Drawer Wall-Hung Base Unit	795 x 445 x 580mm	VIE80B	£885.00	**£1,062.00**
Nostalgic 80 Ceramic Basin*	815 x 470mm	CB8080C	£149.00	**£179.00**
Vienna 80 Nostalgic Basin Combination Total			**£1,034.00**	**£1,240.80**
*Nostalgic 60 Basin - For use for 60 Base Unit	610 x 456mm	CB8060C	£109.00	**£131.00**

Vienna 60 Worktop Combination - Oval Basin	Dimensions	Ref.	Exc. VAT	Inc. VAT
Vienna 60 2-Drawer Wall-Hung Base Unit	600 x 445 x 580mm	VIE60B	£726.00	**£871.20**
Vienna 60 Worktop*	600 x 458 x 18mm	VIEWT60	£69.00	**£82.80**
Harmony Ceramic 560 Vanity Basin - NTH	560 x 435mm	CB241	£108.00	**£130.00**
Vienna 60 Worktop Combination - Oval Basin Total			**£903.00**	**£1,083.60**
***Alternative Worktop Option**				
Vienna 80 Worktop	800 x 458 x 18mm	VIEWT80	£69.00	**£82.80**

Belmont 50

Traditional Furniture in 3 Size Options

Belmont 50 Combination in Ash Grain Graphite Finish

Grosvenor 50 Ceramic Basin Detail

		Ash Grain Cashmere	Ash Grain Indigo	Ash Grain Graphite		
Belmont 50 Combination	**Dimensions**	**Ref.**	**Ref.**	**Ref.**	**Exc. VAT**	**Inc. VAT**
Belmont 50 1-Door Base Unit	462 x 280 x 785mm	BEL50BC	BEL50BI	BEL50BG	£518.00	**£621.60**
Grosvenor 50 Ceramic Basin (2TH Only)	500 x 310mm	GR-B112S	GR-B112S	GR-B112S	£120.00	**£144.00**
Belmont 50 Combination Total					**£638.00**	**£765.60**
Belmont 55 Combination	**Dimensions**	**Ref.**	**Ref.**	**Ref.**	**Exc. VAT**	**Inc. VAT**
Belmont 55 1-Door Base Unit	494 x 450 x 755mm	BEL55BC	n/a	BEL55BG	£574.00	**£688.80**
Grosvenor 55 Ceramic Basin (1 or 2TH)	554 x 485mm	GR-B112M	n/a	GR-B112M	£127.00	**£152.00**
Belmont 55 Combination Total					**£701.00**	**£841.20**
Belmont 60 Combination	**Dimensions**	**Ref.**	**Ref.**	**Ref.**	**Exc. VAT**	**Inc. VAT**
Belmont 60 2-Door Base Unit	552 x 470 x 755mm	BEL60BC	BEL60BI	BEL60BG	£602.00	**£722.40**
Grosvenor 60 Ceramic Basin (1 or 2TH)	610 x 506mm	GR-B112L	GR-B112L	GR-B112L	£156.00	**£187.00**
Belmont 60 Combination Total					**£758.00**	**£909.60**

Belmont 55 & 60

Available in 3 Ash Grain Wood Finishes

10 YEAR MANUFACTURERS GUARANTEE

Belmont 55 Combination in Ash Grain Cashmere Finish

Belmont 60 Combination in Ash Grain Indigo Finish

		Ash Grain Cashmere	Ash Grain Indigo	Ash Grain Graphite		
Belmont 50 Combination	**Dimensions**	**Ref.**	**Ref.**	**Ref.**	**Exc. VAT**	**Inc. VAT**
Belmont 50 1-Door Base Unit	462 x 280 x 785mm	BEL50BC	BEL50BI	BEL50BG	£518.00	**£621.60**
Grosvenor 50 Ceramic Basin (2TH Only)	500 x 310mm	GR-B112S	GR-B112S	GR-B112S	£120.00	**£144.00**
Belmont 50 Combination Total					**£638.00**	**£765.60**
Belmont 55 Combination	**Dimensions**	**Ref.**	**Ref.**	**Ref.**	**Exc. VAT**	**Inc. VAT**
Belmont 55 1-Door Base Unit	494 x 450 x 755mm	BEL55BC	n/a	BEL55BG	£574.00	**£688.80**
Grosvenor 55 Ceramic Basin (1 or 2TH)	554 x 485mm	GR-B112M	n/a	GR-B112M	£127.00	**£152.00**
Belmont 55 Combination Total					**£701.00**	**£841.20**
Belmont 60 Combination	**Dimensions**	**Ref.**	**Ref.**	**Ref.**	**Exc. VAT**	**Inc. VAT**
Belmont 60 2-Door Base Unit	552 x 470 x 755mm	BEL60BC	BEL60BI	BEL60BG	£602.00	**£722.40**
Grosvenor 60 Ceramic Basin (1 or 2TH)	610 x 506mm	GR-B112L	GR-B112L	GR-B112L	£156.00	**£187.00**
Belmont 60 Combination Total					**£758.00**	**£909.60**

Tuscany 90

GENESIS DELUXE

2 YEAR MANUFACTURERS GUARANTEE

The Tuscany Furniture can be used with the Porto 1-Piece Basin (p263) or with dedicated a Worktop and your choice of Vanity Basin (p67-69)

Tuscany 90 Combination - Pearl Grey Finish with Ritz Chrome Knobs

Cornell Vanity Basin

Porto 90 Basin

Oregon 620 Vanity Basin

		Dusty Pink	Pearl Grey		
Tuscany 90 with Worktop Combination	**Dimensions**	**Ref.**	**Ref.**	**Exc. VAT**	**Inc. VAT**
Tuscany 90 3-Drawer Base Unit	890 x 450 x 800mm	TUS90BDP	TUS90BPG	£1,095.00	**£1,314.00**
Tuscany 90 Worktop	900 x 460mm	TUS90TDP	TUS90TPG	£159.00	**£190.80**
Cornell Ceramic Vanity Basin	555 x 432 x 140mm	CB1023E	CB1023E	£212.00	**£254.00**
4 x Ritz Knobs - Chrome	-	RZKNB	RZKNB	£56.00	**£67.20**
Tuscany 90 with Worktop Combination Total				**£1,522.00**	**£1,826.40**
Also Shown With:					
Charlotte Basin Mono inc. Waste	-	ASC-8922W	ASC-8922W	£74.00	**£88.80**
Aston Mirror with Integrated Light	800 x 600mm	ASC5800E	ASC5800E	£247.00	**£296.00**
Alternative Basin Options:					
Porto 90 Ceramic Basin	900 x 460mm	CB5490	CB5490	£321.00	**£385.00**
Oregon 620 Ceramic Vanity Basin	620 x 500mm	UKB-111	UKB-111	£95.00	**£114.00**

GENESIS DELUXE

Tuscany 90

Available in Dusty Pink and Pearl Grey Finishes

2 YEAR MANUFACTURERS GUARANTEE

Tuscany 90 Combination - Dusty Pink Finish with Q-Line Bow Handles

Porto 90 Basin & Drawer Detail

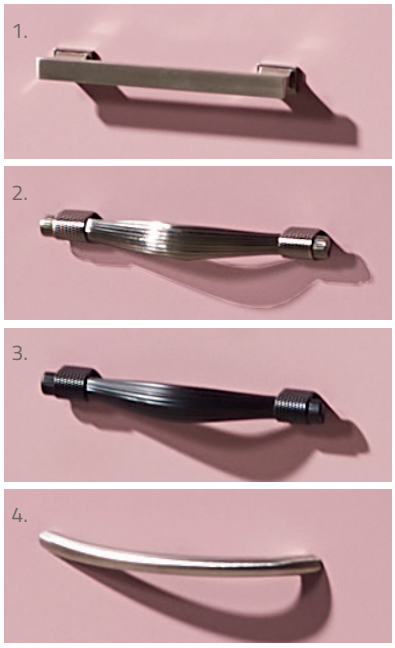

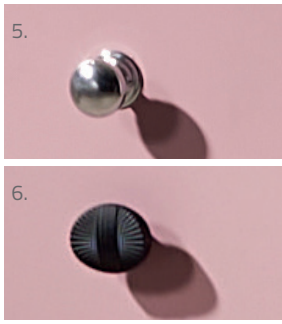

Featured Handles:

1 - Ritz Bar Handle - Satin

2 - Rimini Handle - Pewter

3 - Rimini Handle - Black

4 - Q-Line Bow Handle - Chrome

5 - Ritz Knob - Chrome

6 - Rimini Knob - Black

The Tuscany Furniture is supplied un-drilled to be used with your choice of Handle - Compatible with the Q-Line (p351), Rimini (p265) & Ritz (p358) Handle Ranges

		Dusty Pink	Pearl Grey		
Tuscany 90 Combination	**Dimensions**	**Ref.**	**Ref.**	**Exc. VAT**	**Inc. VAT**
Tuscany 90 3-Drawer Base Unit	890 x 450 x 800mm	TUS90BDP	TUS90BPG	£1,095.00	**£1,314.00**
Porto 90 Ceramic Basin	900 x 460mm	CB5490	CB5490	£321.00	**£385.00**
3 x Q-Line Bow Handles - Chrome	-	GQH570	GQH570	£30.00	**£36.00**
Tuscany 90 Combination Total				**£1,446.00**	**£1,735.20**
Also Shown With:					
Charlotte Basin Mono inc. Waste	-	ASC-8922W	ASC-8922W	£74.00	**£88.80**
Radius Round Mirror with Integrated Light	600mm Round	ASC6602	ASC6602	£243.00	**£292.00**

Rimini 50

Available in Wall-Hung and Floorstanding Options with 5 Handle Options

Rimini 50 Wall-Hung Combination
Ash Grain Graphite Finish

Rimini 50 Floorstanding Combination
Ash Grain Cashmere Finish

Rimini 50 Wall-Hung Combination	Dimensions	Ref. Ash Grain Cashmere	Ref. Ash Grain Denim	Ref. Ash Grain Graphite	Exc. VAT	Inc. VAT
Rimini 50 1-Door Wall-Hung Base Unit	492 x 358 x 400mm	RIM50WBC	RIM50WBD	RIM50WBG	£459.00	**£550.80**
Rimini Handle - Pewter Finish	-	RIMBARPEWT	RIMBARPEWT	RIMBARPEWT	£19.00	**£22.80**
Rimini 50 Ceramic Basin	500 x 360mm	RIM50BAS	RIM50BAS	RIM50BAS	£96.00	**£115.00**
Rimini 50 Floorstanding Combination Total					**£574.00**	**£688.80**

Rimini 50 Floorstanding Combination	Dimensions	Ref.	Ref.	Ref.	Exc. VAT	Inc. VAT
Rimini 50 1-Door Floorstanding Base Unit	492 x 358 x 800mm	RIM50BC	RIM50BD	RIM50BG	£559.00	**£670.80**
Rimini Knob - Pewter Finish	-	RIMKNBPEWT	RIMKNBPEWT	RIMKNBPEWT	£14.00	**£16.80**
Rimini 50 Ceramic Basin	500 x 360mm	RIM50BAS	RIM50BAS	RIM50BAS	£96.00	**£115.00**
Rimini 50 Floorstanding Combination Total					**£669.00**	**£802.80**

Rimini 60 & 80

Now Available in 80 Floorstanding Option in 2 Colour Finishes

10 YEAR MANUFACTURERS GUARANTEE

Rimini 60 Base Unit in Ash Grain Denim
Shown with Curved Satin Handles

Additional Handle Options

Rimini Handle - Pewter Finish

Rimini Handle - Black Finish

Rimini Knob - Pewter Finish

Rimini Knob - Black Finish

Rimini Furniture will now be supplied with your choice of handle. Please add your handle price to your base unit price:

Handle (Each)	Ref.	Exc. VAT	Inc. VAT
Curved Handle - Satin*	RIMCURVED	£18.00	**£21.60**
Rimini Handle - Pewter	RIMBARPEWT	£19.00	**£22.80**
Rimini Handle - Black	RIMBARBL	£19.00	**£22.80**
Rimini Knob - Pewter	RIMKNBPEWT	£14.00	**£16.80**
Rimini Knob - Black	RIMKNBBL	£14.00	**£16.80**

** Shown on Main Image*

		Ash Grain Cashmere	Ash Grain Denim	Ash Grain Graphite		
Rimini 60 2-Door Combination	**Dimensions**	**Ref.**	**Ref.**	**Ref.**	**Exc. VAT**	**Inc. VAT**
Rimini 60 2-Door Base Unit	600 x 465 x 800mm	RIM60BC	RIM60BD	RIM60BG	£588.00	**£705.60**
2 x Rimini Curved Handle - Satin	-	RIMCURVED	RIMCURVED	RIMCURVED	£36.00	**£43.20**
Rimini 60 Ceramic Basin	630 x 480mm	CB131	CB131	CB131	£145.00	**£174.00**
Rimini 60 2-Door Combination Total					**£769.00**	**£922.80**

Rimini 80 2-Door Combination	**Dimensions**	**Ref.**	**Ref.**	**Ref.**	**Exc. VAT**	**Inc. VAT**
Rimini 80 2-Door Base Unit	777 x 454 x 800mm	N/A	RIM80BD	RIM80BG	£659.00	**£790.80**
2 x Rimini Curved Handle - Satin	-	N/A	RIMCURVED	RIMCURVED	£36.00	**£43.20**
Rimini 80 Ceramic Basin	805 x 470mm	N/A	RIM80BAS	RIM80BAS	£177.00	**£212.00**
Rimini 80 2-Door Combination Total					**£872.00**	**£1,046.40**

Rimini

Matching WC Unit, Mirror & Tall Column Options Available

Rimini 60 Combination	Dimensions	Ash Grain Cashmere Ref.	Ash Grain Denim Ref.	Ash Grain Graphite Ref.	Exc. VAT	Inc. VAT
Rimini 60 2-Door Base Unit	600 x 465 x 800mm	RIM60BC	RIM60BD	RIM60BG	£588.00	**£705.60**
2 x Rimini Curved Handle - Satin	-	RIMCURVED	RIMCURVED	RIMCURVED	£36.00	**£43.20**
Rimini 60 Ceramic Basin	630 x 480mm	CB131	CB131	CB131	£145.00	**£174.00**
Rimini 60 Combination Total					**£769.00**	**£922.80**

Also Shown With:

Rimini 60 Slimline WC Base Unit	545 x 245 x 800mm	RIM60WCC	RIM60WCD	RIM60WCG	£379.00	**£454.80**
Grosvenor Back-to-Wall Pan	-	GR-W212	GR-W212	GR-W212	£191.00	**£229.00**
Nostalgic Wooden Soft Close Seat - Graphite Finish	-	NOS-SEAT	NOS-SEAT	NOS-SEAT	£135.00	**£162.00**
Rimini 60 Mirror *	589 x 52 x 782mm	n/a	RIM60MD	RIM60MG	£285.00	**£342.00**
Rimini 460 2-Door Tall Column*	456 x 397 x 1744mm	RIMCOLC	RIMCOLD	RIMCOLG	£936.00	**£1,123.20**
2 x Rimini Curved Handle - Satin	-	RIMCURVED	RIMCURVED	RIMCURVED	£36.00	**£43.20**

**While Stocks Last*

Nostalgic & Deco Wall-Hung 60

Traditional Style Units in 2 Colour Options

2 YEAR MANUFACTURERS GUARANTEE

Nostalgic 60 Combination - Matt White Finish

Deco 60 Combination - Matt White Finish

Matt White

Nostalgic 60 Combination	Dimensions	Ref.	Exc. VAT	Inc. VAT
Nostalgic 60 2-Door, 1-Drawer Base Unit	595 x 450 x 800mm	NOS60BU-MW	£799.00	£958.80
Nostalgic 60 Ceramic Basin	610 x 456mm	CB8060C	£109.00	£131.00
Nostalgic 60 Combination Total			**£908.00**	**£1,089.60**

Deco 60 Wall-Hung Combination	Dimensions	Ref.	Exc. VAT	Inc. VAT
Deco 60 2-Drawer Wall-Hung Base Unit	590 x 450 x 500mm	DEC60WHW	£469.00	£562.80
Monica 60 Resin Basin	600 x 460mm	M60BS	£164.00	£196.80
Deco 60 Wall-Hung Combination Total			£633.00	**£756.60**

Stamford 50 & 60

GENESIS DELUXE

10 YEAR MANUFACTURERS GUARANTEE

Traditional Shaker Design in Modern Platinum Grey & White Gloss Finishes

Stamford 50 Combination in Gloss White
Pictured with Eden 50 Curved Basin

Stamford 60 Combination in Platinum Grey
Pictured with Q-Line 60 Square Basin

		Gloss White			Platinum Grey (PL)		
Stamford 50 Combination	**Dimensions**	**Ref.**	**Exc. VAT**	**Inc. VAT**	**Ref.**	**Exc. VAT**	**Inc. VAT**
Stamford 50 2-Door Base Unit	490 x 344 x 800mm	STA50BUW	£208.00	**£249.60**	STA50BUPL	£225.00	**£270.00**
Eden 50 Curved Resin Basin	505 x 350mm (450 max)	ED50BS	£189.00	**£226.80**	ED50BS	£189.00	**£226.80**
Stamford 50 Combination Total			**£397.00**	**£476.40**		**£414.00**	**£496.80**

		Gloss White			Platinum Grey (PL)	Pearl Grey (PG)		
Stamford 60 Combination	**Dimensions**	**Ref.**	**Exc. VAT**	**Inc. VAT**	**Ref.**		**Exc. VAT**	**Inc. VAT**
Stamford 60 2-Door Base Unit	590 x 344 x 800mm	STA60BUW	£229.00	**£274.80**	STA60BUPL/PG		£248.00	**£297.60**
Q-Line 60 Square Resin Basin	600 x 350mm	QXLINE600	£175.00	**£210.00**	QXLINE600		£175.00	**£210.00**
Stamford 60 Combination Total			**£404.00**	**£484.80**			**£423.00**	**£507.60**

GENESIS DELUXE

Stamford 100 & 120

Featuring the Stamford 100 & 120 1-Piece Basins

10 YEAR MANUFACTURERS GUARANTEE

Stamford 120 WC Combination in Platinum Grey
Basin Pictured Left Hand

		Gloss White			Platinum Grey (PL)	Pearl Grey (PG) in 120 Only	
Stamford 100 Combination*	**Dimensions**	**Ref.**	**Exc. VAT**	**Inc. VAT**	**Ref.**	**Exc. VAT**	**Inc. VAT**
Stamford 50 2-Door Base Unit	490 x 344 x 800mm	STA50BUW	£208.00	**£249.60**	STA50BUPL	£225.00	**£270.00**
Urban 50 WC Base Unit (No Top)	500 x 344 x 800mm	UR50WCNTW	£182.00	**£218.40**	UR50WCNTPL	£196.00	**£235.20**
Stamford 100 Resin Basin (LH or RH)	1000 x 350mm (400 max)	STA100BAS	£340.00	**£408.00**	STA100BAS	£340.00	**£408.00**
Stamford 100 Combination Total			**£730.00**	**£876.00**		**£761.00**	**£913.20**

Stamford 120 Combination	**Dimensions**	**Ref.**	**Exc. VAT**	**Inc. VAT**	**Ref.**	**Exc. VAT**	**Inc. VAT**
Stamford 60 2-Door Base Unit	590 x 344 x 800mm	STA60BUW	£229.00	**£274.80**	STA60BUPL/PG	£248.00	**£297.60**
Urban 60 WC Base Unit (No Top)	600 x 344 x 800mm	UR60WCNTW	£212.00	**£254.40**	UR60WCNTPL/PG	£225.00	**£270.00**
Stamford 120 Resin Basin (LH or RH)	1200 x 350mm (400 max)	STA120BAS	£402.00	**£482.40**	STA120BAS	£402.00	**£482.40**
Stamford 120 Combination Total			**£843.00**	**£1,011.60**		**£875.00**	**£1,050.00**

Stamford 150

GENESIS DELUXE

10 YEAR MANUFACTURERS GUARANTEE

Featuring the Stamford 30 1-Door Base Unit

Stamford 150 WC Combination in Pearl Grey
Basin Pictured Left Hand

		Gloss White			Platinum Grey (PL)		Pearl Grey (PG)
Stamford 150 Combination	**Dimensions**	**Ref.**	**Exc. VAT**	**Inc. VAT**	**Ref.**	**Exc. VAT**	**Inc. VAT**
Stamford 60 2-Door Base Unit	590 x 344 x 800mm	STA60BUW	£229.00	**£274.80**	STA60BUPL/PG	£248.00	**£297.60**
Stamford 30 1-Door Base Unit (No Top)	300 x 344 x 800mm	STA30BUW	£157.00	**£188.40**	STA30BUPL/PG	£176.00	**£211.20**
Urban 60 WC Base Unit (No Top)	600 x 344 x 800mm	UR60WCNTW	£212.00	**£254.40**	UR60WCNTPL/PG	£225.00	**£270.00**
Q-Line 150 Round Resin Basin (LH or RH)	1500 x 350mm (450 max)	QG1500RN	£592.00	**£710.40**	QG150RN	£592.00	**£710.40**
Stamford 150 Combination Total			**£1,190.00**	**£1,428.00**		**£1,241.00**	**£1,489.20**
Also Shown With:							
Gemini 60 Mirrored Cabinet	600 x 160 x 600mm	n/a	-	**-**	GM60MCPG	£450.00	**£540.00**
Oregon Rimless Back-to-Wall Pan & Seat	-	OR-1273BWP	£309.00	**£371.00**	OR-1273BWP	£309.00	**£371.00**
Roma Basin Mono - Matt Grey	-	QXRO05MG	£94.00	**£112.80**	QXRO05MG	£94.00	**£112.80**

GENESIS DELUXE

Stamford 170

Featuring the Stamford 20 & 30 1-Door Base Units

10 YEAR MANUFACTURERS GUARANTEE

Stamford 170 WC Combination in Gloss White

		Gloss White			Platinum Grey (PL)	Pearl Grey (PG)	
Stamford 170 Combination	**Dimensions**	**Ref.**	**Exc. VAT**	**Inc. VAT**	**Ref.**	**Exc. VAT**	**Inc. VAT**
Stamford 60 2-Door Base Unit	590 x 344 x 800mm	STA60BUW	£229.00	**£274.80**	STA60BUPL/PG	£248.00	**£297.60**
Stamford 30 1-Door Base Unit (No Top)	300 x 344 x 800mm	STA30BUW	£157.00	**£188.40**	STA30BUPL/PG	£176.00	**£211.20**
Stamford 20 1-Door Base Unit (No Top)	200 x 344 x 800mm	STA20BUW	£143.00	**£171.60**	STA20BUPL/PG	£160.00	**£192.00**
Urban 60 WC Base Unit (No Top)	600 x 344 x 800mm	UR60WCNTW	£212.00	**£254.40**	UR60WCNTPL/PG	£225.00	**£270.00**
Q-Line 150 Gloss White Worktop (Cut to Size)	1500 x 350 x 30mm	GQ150WT	£160.00	**£192.00**	GQ150WT	£180.00	**£192.00**
Q-Line 60 Curved Resin Basin	600 x 350mm	QXLINE600C	£250.00	**£300.00**	QXLINE600C	£250.00	**£300.00**
Stamford 170 Combination Total			**£1,151.00**	**£1,381.20**		**£1,219.00**	**£1,462.80**
Also Shown With:							
Oregon Rimless Back-to-Wall Pan & Seat	-	OR-1273BWP	£309.00	**£371.00**	OR-1273BWP	£309.00	**£371.00**
Chalotte Basin Mono	-	ASC-8922W	£74.00	**£88.80**	ASC-8922W	£74.00	**£88.80**
Aston Mirror with Integrated Lights	600 x 800 x 29mm	ASC5800E	£222.00	**£266.00**	ASC5800E	£222.00	**£266.00**

Aston

Floorstanding options in Denim and Dusty Grey Finishes

Aston 2-Drawer Wall-Hung Combination - Gloss White

Aston 2-Door Floorstanding Combination - Denim

		Gloss White	Dark Walnut*	Denim	Dusty Grey		
Aston 60 2-Drawer Combination	**Dimensions**	**Ref.**	**Ref.**	**Ref.**	**Ref.**	**Exc. VAT**	**Inc. VAT**
Aston 60 2-Drawer Wall-Hung Base Unit	600 x 458 x 500mm	AS60WHW	n/a	AS60WHDEN	AS60WHDG	£473.00	**£567.60**
Arizona 60 Ceramic Basin	610 x 460mm	AR60BAS	n/a	AR60BAS	AR60BAS	£95.00	**£114.00**
Aston 60 2-Drawer Wall-Hung Combination Total						**£568.00**	**£681.60**
Aston 80 2-Drawer Combination							
Aston 80 2-Drawer Wall-Hung Base Unit	800 x 458 x 500mm	n/a	AS80WHDWN	n/a	n/a	£505.00	**£606.00**
Arizona 80 Ceramic Basin	800 x 465mm	n/a	AR80BAS	n/a	n/a	£139.00	**£167.00**
Aston 80 2-Drawer Wall-Hung Combination Total						**£644.00**	**£772.80**
Aston 60 2-Door Combination							
Aston 60 2-Door Floorstanding Base	590 x 458 x 800mm	AS60FSW	n/a	AS60FSDEN	AS60FSDG	£394.00	**£472.80**
Porto 60 Ceramic Basin	600 x 460mm	CB5460	n/a	CB5460	CB5460	£169.00	**£203.00**
Aston 60 2-Door Floorstanding Combination Total						**£563.00**	**£675.60**
Aston 75 2-Door Combination							
Aston 75 2-Door Floorstanding Base	750 x 458 x 800mm	AS75FSW	n/a	AS75FSDEN	AS75FSDG	£454.00	**£544.80**
Porto 75 Ceramic Basin	755 x 460mm	CB5475	n/a	CB5475	CB5475	£197.00	**£236.00**
Aston 75 2-Door Floorstanding Combination Total						**£651.00**	**£781.20**

**Dark Walnut Finish - While Stocks Last*

Aston

1-Piece Basin Option and Slimline WC Base Units in 4 colour options

Aston 120 1-Piece Combination - Dusty Grey

Kansas 60 Slimline WC Unit - Dark Walnut

Kansas 60 Slimline WC Base with Top - Denim

		Gloss White	Dark Walnut*	Denim	Dusty Grey		
Aston 120 1-Piece Combination	**Dimensions**	**Ref.**	**Ref.**	**Ref.**	**Ref.**	**Exc. VAT**	**Inc. VAT**
Aston 60 2-Door Floorstanding Base	590 x 458 x 800mm	AS60FSW	n/a	AS60FSDEN	AS60FSDG	£394.00	**£472.80**
Aston 60 WC Base (No Top)	600 x 250 x 800mm	AS60WCNTW	n/a	AS60WCNTDEN	AS60WCNTDG	£275.00	**£330.00**
Monica 120 1-Piece Basin (LH or RH)	1200 x 260mm (460 max)	M1201P	n/a	M1201P	M1201P	£381.00	**£457.20**
Aston 120 2-Door 1-Piece Combination Total						**£1,050.00**	**£1,260.00**

Aston 3-Drawer WC Combination	**Dimensions**	**Ref.**				**Exc. VAT**	**Inc. VAT**
Aston 60 3-Drawer Floorstanding Base	600 x 458 x 800mm	AS603DW	n/a	n/a	n/a	£607.00	**£728.40**
Arizona 60 Ceramic Basin	610 x 460mm	AR60BAS	n/a	n/a	n/a	£95.00	**£114.00**
Kansas 60 Slimline WC Base with Top	600 x 202 x 800mm	KAN60WCW	n/a	n/a	n/a	£250.00	**£300.00**
Aston 120 3-Drawer WC Combination Total						**£952.00**	**£1,142.40**
Also Available							
Kansas 60 Slimline WC Base with Top	600 x 202 x 800mm	KAN60WCW	KAN60WCDWN	KAN60WCDEN	KAN60WCDG	£250.00	**£300.00**
Kansas Mirror with Integrated Lights	600 x 800mm	ASC6806-80	ASC6806-80	ASC6806-80	ASC6806-80	£235.00	**£282.00**

10 Year Manufacturers Guarantee **Dark Walnut Finish - While Stocks Last*

Kansas

Wall-Hung & Floorstanding Combinations available in Gloss White Finish

50 2-Drawer Base Unit & Slim WC

Floorstanding Base Unit Available with either 2-Drawers *(pictured)* or 2-Doors

2-Drawer Floorstanding Base Unit

Kansas 110 WC Combination	Dimensions	Ref.	Exc. VAT	Inc. VAT
Kansas 50 2-Drawer Base Unit	500 x 395 x 800mm	KN50BU-W	£514.00	**£616.80**
Naxos 50 Ceramic Basin	500 x 400mm	NX50BAS	£92.00	**£110.40**
Kansas 60 Slim WC Base Unit	600 x 202 x 800mm	KN60WC-W	£250.00	**£300.00**
Kansas 110 WC Combination Total			**£856.00**	**£1,027.20**

2-Door Floorstanding Base Unit Options *(Not Pictured)*

Kansas 60 2-Door Combination	Dimensions	Ref.	Exc. VAT	Inc. VAT
Kansas 60 2-Door Base Unit	600 x 395 x 800mm	KN60BU-W	£398.00	**£477.60**
Kansas 60 Ceramic Basin	610 x 390mm	KN60BAS	£127.00	**£152.40**
Combination Total			**£525.00**	**£630.00**

Kansas 60 Basin Detail

80 2-Drawer Base Unit & Slimline WC Combination

Wall-Hung Base Unit Available either 60 or 80 2-Drawer

60 Wall-Hung Base Unit & WC Combination	Dimensions	Ref.	Exc. VAT	Inc. VAT
Kansas 60 2-Drawer Base	600 x 370 x 500mm	KN60WH-W	£473.00	**£567.60**
Kansas 60 Ceramic Basin	610 x 390mm	KN60BAS	£127.00	**£152.40**
Combination Total			**£600.00**	**£720.00**

80 Wall-Hung Base Unit & WC Combination				
Kansas 80 2-Drawer Base	800 x 395 x 500mm	KN80WH-W	£505.00	**£606.00**
Kansas 80 Ceramic Basin	810 x 390mm	KN80BAS	£171.00	**£205.20**
Combination Total			**£676.00**	**£811.20**

Also Shown With:

Kansas 60 Slimline WC Base	600 x 202 x 800mm	KN60WC-W	£250.00	**£300.00**

Porto 60

A versatile range that can be used as a wall-hung option with ceramic basin, or with a reversible worktop and vanity basin. Both options can also be used with the black framework

Porto 60 Combination with Frame & Worktop - Matt Black/Sonoma Oak Finish

Porto 60 Wall-Hung Combination - Matt Black/Sonoma Oak Finish

Reversible Worktop

Porto Drawer Inset Detail

Matt Black/ Sonoma Oak

Porto 60 Worktop & Frame Combination	Dimensions	Ref.	Exc. VAT	Inc. VAT
Porto 60 Wall-Hung Base Unit	600 x 460 x 400mm	POR60BU	£684.00	**£820.80**
Porto 60 Reversible Worktop	610 x 460mm	POR60WT	£89.00	**£106.80**
Porto 60 Framework	600 x 460 x 400mm	PORFRM	£522.00	**£626.40**
Aston Ceramic Vanity Basin - 1TH	415 x 415mm	CB102	£85.00	**£102.00**
Porto 60 Worktop & Frame Combination			**£1,380.00**	**£1,656.00**

Porto 60 Base & Basin Combination	Dimensions	Ref.	Exc. VAT	Inc. VAT
Porto 60 Wall-Hung Base Unit	600 x 460 x 400mm	POR60BU	£684.00	**£820.80**
Porto 60 Ceramic Basin	600 x 460mm	CB5460	£169.00	**£203.00**
Porto 60 Base & Basin Combination			**£853.00**	**£1,023.60**

Pisa 60

Wall-Hung Unit with Handle-less Design

Pisa 60 Base in Matt Black/Sonoma Oak finish with WC Base & Wall Cabinet

Matt Black/
Sonoma Oak

Pisa 60 Combination	Dimensions	Ref.	Exc. VAT	Inc. VAT
Pisa 60 1-Drawer Base Unit	600 x 388 x 400mm	PIS60WMB	£535.00	**£642.00**
Naxos 60 Basin	610 x 390mm	NX60BAS	£103.00	**£123.60**
Pisa 60 Combination			**£638.00**	**£765.60**
Also Shown With:				
Pisa 60 WC Base Unit	600 x 220 x 800mm	PISWCMB	£317.00	**£380.40**
Pisa 60 Wall/WC Cabinet	600 x 220 x 1218mm	PISCABMB	£440.00	**£528.00**
Rimini Rimless Back-to-Wall Pan	-	RIM-43BTW	£267.00	**£320.00**
Utah Mirror with Black Frame	600 x 700mm	ASC6071B	£273.00	**£328.00**

Pisa 60

Available with matching WC Base Unit and Wall-Unit that can either be hung by itself or connected to the WC Base Unit - Items are also compatable with the Porto Furniture range

Pisa 60 Wall Cabinet installed with the Pisa 60 WC Base Unit

The unique Pisa Wall Cabinet can be installed as a stand-alone product or can be fitted on top of the WC Base Unit to create a chic storage solution.

The WC Base & Wall Cabinet can also be used with the Porto Furniture.

Pisa 60 WC Base Unit

NEW Geo 60

Features unique geometric drawer front design in Matt Black finish

Geo 60 with Naxos 60 Basin Option

Unique Geometric Design

Kansas 60 Basin Option

Matt Black

NEW Geo 60 Combination	Dimensions	Ref.	Exc. VAT	Inc. VAT
NEW Geo 60 1-Drawer Base Unit	600 x 383 x 390mm	GEO60BBL	£407.00	**£488.40**
Naxos 60 Ceramic Basin	610 x 390mm	NX60BAS	£103.00	**£123.60**
Geo 60 Combination Total			**£510.00**	**£612.00**
Also Shown With:				
Utah 60 Mirror with Black Frame	600 x 700mm	ASC6071B	£273.00	**£327.60**
Roma Basin Mono - Matt Black	-	QXRO05MB	£83.00	**£99.60**
Alternative Basin Option:				
Kansas 60 Ceramic Basin	610 x 390mm	KN60BAS	£127.00	**£152.40**

NEW Sofia 60

2-Drawer Base Unit in NEW Nebraska Oak finish

10 YEAR MANUFACTURERS GUARANTEE

Sofia 60 with Arizona 60 Basin Option

Porto 60 Basin Option

NEW Nebraska Oak Finish

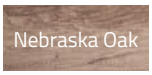

Nebraska Oak

NEW Sofia 60 Combination	Dimensions	Ref.	Exc. VAT	Inc. VAT
NEW Sofia 60 2-Drawer Base Unit	600 x 388 x 500mm	SOF60BNO	£499.00	**£598.80**
Arizona 60 Ceramic Basin	610 x 460mm	AR60BAS	£95.00	**£114.00**
Sofia 60 Combination Total			**£594.00**	**£712.80**
Also Shown With:				
Utah 60 Mirror with Black Frame	600 x 700mm	ASC6071B	£273.00	**£327.60**
Alternative Basin Options:				
Porto 60 Ceramic Basin	600 x 460mm	CB5460	£169.00	**£202.80**
Monica 60 Resin Basin	600 x 460mm	M60BS	£164.00	**£196.80**

NEW Evora 60

Linear design with two basin options, in two popular finishes

Evora 60 with Radius 60 Basin - Gloss White Finish

Evora 60 with Domino 60 Basin - Platinum Grey Finish

		Gloss White			Platinum Grey		
NEW Evora 2-Door Floorstanding Combination	**Dimensions**	**Ref.**	**Exc. VAT**	**Inc. VAT**	**Ref.**	**Exc. VAT**	**Inc. VAT**
NEW Evora 60 2-Door Floorstanding Base Unit	590 x 375 x 800mm	EVO60BW	£287.00	**£344.40**	EVO60BPL	£327.00	**£392.40**
Radius 60 Resin Basin	600 x 400mm	RD60BS	£161.00	**£214.80**	RD60BS	£161.00	**£214.80**
Evora 2-Door Floorstanding Combination Total			**£448.00**	**£537.60**		**£488.00**	**£585.60**
Alternative Basin Option:							
Domino 60 Resin Basin	600 x 400mm	DOM60BAS	£179.00	**£214.80**	DOM60BAS	£179.00	**£214.80**

NEW Sintra 60

Classic 2-Door Base Unit in Gloss White finish, with two basin options

10 YEAR MANUFACTURERS GUARANTEE

Sintra 60 with Radius 60 Basin - Gloss White Finish

Radius 60 Basin Detaii

Gloss White

NEW Sintra 60 Combination	Dimensions	Ref.	Exc. VAT	Inc. VAT
NEW Sintra 60 2-Door Base Unit	600 x 375 x 800mm	SIN60BW	£212.00	**£254.40**
Radius 60 Resin Basin	600 x 400mm	RD60BS	£161.00	**£193.20**
Sintra 60 Combination Total			**£373.00**	**£447.60**
Also Shown With:				
Eden 60 Mirrored Cabinet - Gloss White	600 x 160 x 600mm	ED60MC	£282.00	**£338.40**
Alternative Basin Option:				
Domino 60 Resin Basin	600 x 400mm	DOM60BAS	£179.00	**£214.80**

Radius 60

GENESIS

2 YEAR MANUFACTURERS GUARANTEE

Supplied with 3 Colour Drawer Inserts for complete flexibility

Radius 60 Combination

Radius 60 With Column *Sold Separately (Priced Below)*

Domino 60 Resin Basin Detail

Radius 60 Resin Basin Detail

Radius 60 Combination	Dimensions	Ref.	Exc. VAT	Inc. VAT
		Gloss White		
Radius 60 1-Drawer Base Unit	598 x 395 x 420mm	RD60B	£277.00	£332.40
Domino 60 Resin Basin	600 x 400mm	DOM60BAS	£179.00	£214.80
Radius 60 Combination			**£456.00**	**£547.20**
Also Shown With:				
Cornell 60 Mirror	600 x 700mm	ASC12338	£195.00	£234.00
Also Available:				
Radius 60 Resin Basin	600 x 400mm	RD60BS	£161.00	£193.20
Radius 35 Column	350 x 348 x 1600mm	RD35C	£425.00	£510.00

GENESIS DELUXE

Venice 60

2 YEAR MANUFACTURERS GUARANTEE

Available in both Wall-Hung & Floorstanding options with a PVC Wrap Finish

Venice 60 Wall-Hung Combination

Venice 60 Floorstanding Combination

Gloss White

Venice 60 Wall-Hung Combination	Dimensions	Ref.	Exc. VAT	Inc. VAT
Venice 60 1-Drawer Wall-Hung Base Unit	595 x 425 x 500mm	VWH60W	£449.00	**£538.80**
Eton 60 Resin Basin	600 x 450mm	ET60BS	£194.00	**£232.80**
Venice 60 Wall-Hung Combination Total			**£643.00**	**£776.60**

Also Shown With:	Dimensions	Ref.	Exc. VAT	Inc. VAT
Cornell 60 Mirror with LED Light Strips	600 x 700mm	ASC12338	£195.00	**£234.00**

Venice 60 Floorstanding Combination	Dimensions	Ref.	Exc. VAT	Inc. VAT
Venice 60 2-Drawer Base Unit	595 x 425 x 800mm	V60W	£631.00	**£757.20**
Eton 60 Resin Basin	600 x 450mm	ET60BS	£194.00	**£232.80**
Venice 60 Floorstanding Combination Total			**£825.00**	**£990.00**

Cornell 55 & 70 Cloak

Cloakroom Options in Gloss White, Supermatt Graphite & Marine Blue Finishes

Cornell 55 Floorstanding Cloakroom Unit in Gloss White Finish

Cornell 70 Wall-Hung Combination in Supermatt Graphite Finish

		Gloss White	Graphite	Marine Blue		
Cornell 55 Floorstanding Combination	**Dimensions**	**Ref.**	**Ref.**	**Ref.**	**Exc. VAT**	**Inc. VAT**
Cornell 55 2-Door Floorstanding Base Unit	541 x 293 x 800mm	COR55BW	COR55BG	COR55BMB	£523.00	**£627.60**
Cornell 55 Ceramic Basin	550 x 300mm	CR55BAS	CR55BAS	CR55BAS	£115.00	**£138.00**
Cornell 55 Floorstanding Combination Total					**£638.00**	**£765.60**

Cornell 70 Wall-Hung Combination	**Dimensions**	**Ref.**	**Ref.**	**Ref.**	**Exc. VAT**	**Inc. VAT**
Cornell 70 1-Drawer Wall-Hung Base Unit	700 x 363 x 320mm	COR70WHW	COR70WHG	COR70WHMB	£546.00	**£655.20**
Cornell 70 Ceramic Basin	700 x 370mm	CR70BAS	CR70BAS	CR70BAS	£141.00	**£169.20**
Cornell 70 Wall-Hung Combination Total					**£687.00**	**£824.40**

Cornell 50 & 60

Available in Marine Blue Finish both Wall-Hung & Floorstanding

10 YEAR MANUFACTURERS GUARANTEE

Cornell 50 Wall-Hung in Marine Blue Finish

Cornell 60 Floorstanding - Textured Grey Finish

		Marine Blue			Textured White	Textured Grey		
Cornell 50 Wall-Hung Combination	**Dimensions**	**Ref.**	**Exc. VAT**	**Inc. VAT**	**Ref.**	**Ref.**	**Exc. VAT**	**Inc. VAT**
Cornell 50 1-Drawer Wall-Hung Base	470 x 422 x 400mm	CR50WHBUMB	£498.00	**£597.60**	CR50WHBUTW	CR50WHBUTG	£474.00	**£568.80**
Cornell 50 Ceramic Basin	500 x 460mm	CR50BAS	£155.00	**£186.00**	CR50BAS	CR50BAS	£155.00	**£186.00**
Cornell 50 Wall-Hung Combination Total			**£653.00**	**£783.60**			**£629.00**	**£754.80**

		Marine Blue			Textured White	Textured Grey		
Cornell 60 Floorstanding Combination	**Dimensions**	**Ref.**	**Exc. VAT**	**Inc. VAT**	**Ref.**	**Ref.**	**Exc. VAT**	**Inc. VAT**
Cornell 60 2-Drawer Floorstanding Base	596 x 440 x 800mm	CR60BUMB	£650.00	**£780.00**	CR60BUTW	CR60BUTG	£619.00	**£742.80**
Cornell 60 Ceramic Basin	600 x 460mm	CR60BAS	£171.00	**£205.20**	CR60BAS	CR60BAS	£171.00	**£205.20**
Cornell 60 Floorstanding Combination Total			**£821.00**	**£985.20**			**£790.00**	**£948.00**

Also Shown with:	**Dimensions**	**Ref.**	**Exc. VAT**	**Inc. VAT**	**Ref.**	**Ref.**	**Exc. VAT**	**Inc. VAT**
Cornell 55 Slim WC Base Unit	550 x 200 x 800mm	n/a	-	-	CR55WCTW	CR55WCTG	£300.00	**£360.00**
Cornell 35 Tall Column - shown inset	350 x 255 x 1200mm	n/a	-	-	CR35COLTW	CR35COLTG	£479.00	**£574.80**
Utah Basin Mono inc. Click-Clack Waste	-	n/a	-	-	UT05CP	UT05CP	£135.00	**£162.00**
Genesis Concealed Cistern - Dual Flush	-	n/a	-	-	GEN-CONC	GEN-CONC	£54.00	**£64.80**

Roma 60

Now available in Supermatt Marine Blue Finish with Beech Inserts

Roma 60 Combination in Marine Blue Finish

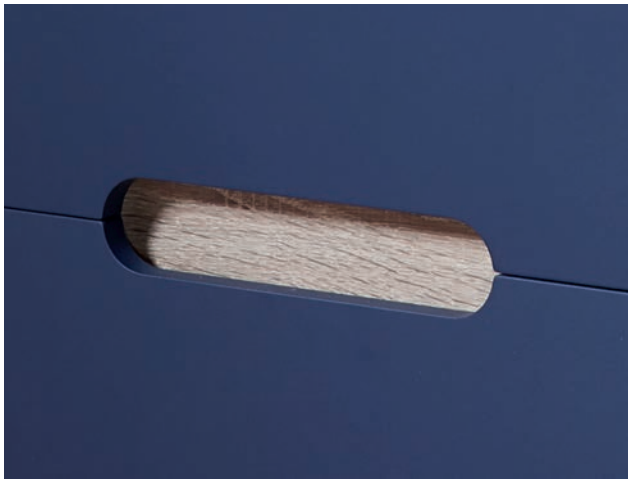

Roma 60 Wall-Hung Combination	Dimensions	Ref. (Marine Blue/ Beech)	Ref. (Beech/Graphite)	Exc. VAT	Inc. VAT
Roma 60 2-Drawer Wall-Hung Base Unit	570 x 440 x 518mm	ROM60MB	ROM60GR	£613.00	**£735.60**
Cornell 60 Ceramic Basin	600 x 460mm	CR60BAS	CR60BAS	£171.00	**£205.20**
Roma 60 Wall-Hung Combination Total				**£784.00**	**£940.80**
Also Shown With:					
Cornell 60 Mirror with LED Light Strips	600 x 700mm	ASC12338		£195.00	**£234.00**
Rimini Basin Mono inc. Click-Clack Waste	-	RI05CP		£149.00	**£178.80**
Also Available:					
Roma 35 2-Door Reversible Column	350 x 255 x 1200mm	ROMCOLMB	ROMCOLGR	£428.00	**£513.60**

Roma 60

Available in a combination of Beech Wood and Super Matt Graphite Finish with Ceramic Basin and Matching Column Option

Roma 60 Combination with Column Option

Reversible Column Detail

Roma 60 Wall-Hung Combination	Dimensions	Ref. (Marine Blue/ Beech)	Ref. (Beech/Graphite)	Exc. VAT	Inc. VAT
Roma 60 2-Drawer Wall-Hung Base Unit	570 x 440 x 518mm	ROM60MB	ROM60GR	£613.00	**£735.60**
Cornell 60 Ceramic Basin	600 x 460mm	CR60BAS	CR60BAS	£171.00	**£205.20**
Roma 60 Wall-Hung Combination Total				**£784.00**	**£940.80**

Also Shown With:

Roma 35 2-Door Reversible Column	350 x 255 x 1200mm	ROMCOLMB	ROMCOLGR	£428.00	**£513.60**
Cornell 60 Mirror with LED Light Strips	600 x 700mm	ASC12338	ASC12338	£195.00	**£234.00**
Urban Basin Mono inc. Click-Clack Waste	-	ALP-9072W	ALP-9072W	£83.00	**£99.60**

Eton 50 & 60

GENESIS DELUXE

2 YEAR MANUFACTURERS GUARANTEE

Available in Gloss White, Matt Grey, Platinum Grey (60 Only) & Pearl Grey (60 Only)

Eton 50 Combination in Matt Grey Finish

Eton 50 Gloss White

Eton 50 Resin Basin Detail

		Gloss White			Matt Grey (MG)	Platinum Grey (PL)	Pearl Grey (PG)		
Eton 50 Combination	**Dimensions**	**Ref.**	**Exc. VAT**	**Inc. VAT**	**Ref.**	**Ref.**	**Ref.**	**Exc. VAT**	**Inc. VAT**
Eton 50 2-Drawer Wall-Hung Base	495 x 440 x 500mm	ET50BW	£553.00	**£663.60**	ET50BMG	n/a	n/a	£566.00	**£679.20**
Eton 50 Resin Basin	500 x 450mm	ET50BS	£174.00	**£208.80**	ET50BS	n/a	n/a	£174.00	**£208.80**
Eton 50 Combination Total			**£727.00**	**£872.40**				**£740.00**	**£888.00**
Also Shown With:									
Charlotte 50 Mirror	500 x 700mm	ASC5700LY	£241.00	**£289.20**					
Aquarius Towel Rail	1200 x 600mm	AQU-12X6	£479.00	**£574.80**					

Eton 60 Combination	**Dimensions**	**Ref.**	**Exc. VAT**	**Inc. VAT**	**Ref.**	**Ref.**	**Ref.**	**Exc. VAT**	**Inc. VAT**
Eton 60 2-Drawer Wall-Hung Base	595 x 440 x 500mm	ET60BW	£589.00	**£706.80**	ET60BMG	ET60BPL	ET60BPG	£604.00	**£724.80**
Eton 60 Resin Basin	600 x 450mm	ET60BS	£194.00	**£232.80**	ET60BS	ET60BS	ET60BS	£194.00	**£232.80**
Eton 60 Combination Total			**£783.00**	**£939.60**				**£798.00**	**£957.60**

GENESIS DELUXE

Eton 80

Additional Column Option

2 YEAR MANUFACTURERS GUARANTEE

Eton 80 Combination - Gloss White Finish

Eton 35 Tall Column

Eton 80 Resin Basin Detail

		Gloss White		
Eton 80 Combination	**Dimensions**	**Ref.**	**Exc. VAT**	**Inc. VAT**
Eton 80 2-Drawer Wall-Hung Base Unit	795 x 440 x 500mm	ET80B	£669.00	**£802.80**
Eton 80 Resin Basin	800 x 450mm	ET80BS	£249.00	**£298.80**
Eton 80 Combination Total			**£918.00**	**£1,101.60**
Also Shown With:				
Eden 80 Mirrored Cabinet with Shaver Socket	800 x 160 x 600mm	ED80MCW	£315.00	**£378.00**
Vermont Basin Mono inc. Click-Clack Waste	-	VE01CP	£130.00	**£156.00**
Also Available:				
Eton 35 Tall Column	350 x 350 x 1600mm	ET35C	£501.00	**£601.20**

Oxford 50 & 60

GENESIS DELUXE

2 YEAR MANUFACTURERS GUARANTEE

Available in Gloss White, Matt Grey, Platinum Grey & Pearl Grey Finishes

Oxford 60 Combination - Gloss White Finish

Eton Resin Basin
Unit in Pearl Grey Finish

Recessed Handle Design
Shown in Platinum Grey Finish

		Gloss White			Platinum Grey (PL)	Pearl Grey (PG)		
Oxford 50 Combination	**Dimensions**	**Ref.**	**Exc. VAT**	**Inc. VAT**	**Ref.**	**Ref.**	**Exc. VAT**	**Inc. VAT**
Oxford 50 2-Door Base Unit	495 x 440 x 800mm	OX50BW	£384.00	**£460.80**	QX50BPL	n/a	£415.00	**£498.00**
Eton 50 Resin Basin	500 x 450mm	ET50BS	£174.00	**£208.80**	ET50BS	n/a	£174.00	**£208.80**
Oxford 50 Combination Total			**£558.00**	**£669.60**			**£589.00**	**£706.80**

Oxford 60 Combination	**Dimensions**	**Ref.**	**Exc. VAT**	**Inc. VAT**	**Ref.**	**Ref.**	**Exc. VAT**	**Inc. VAT**
Oxford 60 2-Door Base Unit	595 x 440 x 800mm	OX60BW	£433.00	**£519.60**	QX60BPL	QX60BPG	£502.00	**£602.40**
Eton 60 Resin Basin	600 x 450mm	ET60BS	£194.00	**£232.80**	ET60BS	ET60BS	£194.00	**£232.80**
Oxford 60 Combination Total			**£627.00**	**£752.40**			**£696.00**	**£835.20**

Also Shown With:				
Charlotte Basin Mono	-	ASC-8922W	£74.00	**£88.80**
Aston Mirror with Integrated Lights	800 x 600mm	ASC5800E	£247.00	**£296.40**

GENESIS DELUXE

Opal 60

Floorstanding Option in two Finishes

2 YEAR MANUFACTURERS GUARANTEE

Opal 60 2-Door Floorstanding Base - Platinum Grey

Opal 60 Basin Detail

Door Detail

		Gloss White			Platinum Grey		
Opal 60 2-Door Floorstanding Combination	**Dimensions**	**Ref.**	**Exc. VAT**	**Inc. VAT**	**Ref.**	**Exc. VAT**	**Inc. VAT**
Opal 60 2-Door Floorstanding Base Unit	599 x 380 (461 max) x 800mm	OP60FLW	£542.00	**£650.40**	OP60FLPL	£605.00	**£726.00**
Opal 60 Resin Basin	605 x 480mm	OP60BAS	£163.00	**£195.60**	OP60BAS	£163.00	**£195.60**
Opal 60 2-Door Floorstanding Combination Total			**£705.00**	**£846.00**		**£768.00**	**£921.60**

Also Shown with:

Opal Round Mirror with Integrated Light & Black Frame	600mm	ASC0606-25	£250.00	**£300.00**
Roma Basin Mono inc. Waste - Matt Grey		QXRO05MG	£94.00	**£112.80**

Opal 120 1-Piece

GENESIS DELUXE

2 YEAR MANUFACTURERS GUARANTEE

One-Piece Option in two Finishes

Opal 120 1-Piece Combination - Platinum Grey - Shown Left Hand

		Gloss White			Platinum Grey		
Opal 120 1-Piece Combination	**Dimensions**	**Ref.**	**Exc. VAT**	**Inc. VAT**	**Ref.**	**Exc. VAT**	**Inc. VAT**
Opal 60 2-Door Floorstanding Base Unit	599 x 380 (461 max) x 800mm	OP60FLW	£542.00	**£650.40**	OP60FLPL	£605.00	**£726.00**
Opal 60 WC Base Unit (No Top)	599 x 380 x 800mm	OP60WCNTW	£234.00	**£280.80**	OP60WCNTPL	£257.00	**£308.40**
Opal 120 1-Piece Resin Basin (LH or RH)	1205 x 480mm	OP120BSN	£416.00	**£499.20**	OP120BSN	£416.00	**£499.20**
Opal 120 1-Piece Combination Total			**£1,192.00**	**£1,430.40**		**£1,278.00**	**£1,533.60**

Also Shown with:

Roma Basin Mono inc. Waste - Matt Grey	-	QXRO05MG	£94.00	**£112.80**

GENESIS DELUXE

Opal 80 & 120

2 YEAR MANUFACTURERS GUARANTEE

Available in Gloss White Finish with a Double Basin Option

Opal 80 Combination - Gloss White Finish

Opal 120 Combination - Gloss White Finish

Gloss White

Opal 80 Combination	Dimensions	Ref.	Exc. VAT	Inc. VAT
Opal 80 2-Drawer Wall-Hung Base Unit	790 x 470 x 500mm	OP80BUW	£650.00	£780.00
Opal 80 Resin Basin	805 x 480mm	OP80BAS	£149.00	£178.80
Opal 80 Combination Total			**£799.00**	**£958.80**

Opal 120 Combination	Dimensions	Ref.	Exc. VAT	Inc. VAT
Opal 120 2-Drawer Wall-Hung Base Unit	1190 x 493 x 500mm	OP120BUW	£650.00	£780.00
Opal 120 Double Resin Basin	1205 x 500mm	OP120BAS	£299.00	£358.80
Opal 120 Combination Total			**£949.00**	**£1,138.20**

Oregon 60 with Top

GENESIS DELUXE

2 YEAR MANUFACTURERS GUARANTEE

The Colour-Matched Oregon Worktop gives you the versatility to create a Counter-Top Furniture Combination with your choice of Vanity Basin

Oregon 60 Base Unit with Top in Matt Black Finish

Radius Ceramic Vanity Basin - 1TH with Kansas Basin Mono

Opal Ceramic Vanity Basin - No Tap Holes

		Gloss White			Matt Moonlight Blue (MMB) / Matt Black (MB) / Matt Grey (MG) / Platinum Grey (PL) / Pearl Grey (PG)		
Oregon 60 with Top Combination	**Dimensions**	**Ref.**	**Exc. VAT**	**Inc. VAT**	**Ref.**	**Exc. VAT**	**Inc. VAT**
Oregon 60 2-Drawer Base Unit	590 x 470 x 500mm	ORE60BU-W	£693.00	**£831.60**	ORE60BU - MMB/MB/MG/PL/PG	£721.00	**£865.20**
Oregon 60 Worktop	600 x 480mm	ORE60WT-W	£95.00	**£114.00**	ORE60WT-MMB/MB/MG/PL/PG	£103.00	**£123.60**
Warwick Ceramic Vanity Basin	420 x 420mm	CB014	£79.00	**£94.80**	CB014	£79.00	**£94.80**
Oregon 60 Wall-Hung with Top Combination Total			£867.00	**£1,040.40**		**£903.00**	**£1,083.60**

Also Shown With:

Utah Black Framed LED Mirror	500 x 600mm	ASC5060	£254.00	**£304.80**
Grosvenor Tall Basin Mono & Waste	-	ASC-8272BL	£117.00	**£140.40**

Alternative Basin Options:

Radius 410 Ceramic Vanity Basin	410 x 410mm	RAD-5002B	£87.00	**£104.00**
Opal 445 Ceramic Vanity Basin	445 x 445mm	CB772	£119.00	**£142.80**

Our Full Range of Vanity Basins are available on p67-69

GENESIS DELUXE

Oregon 60

2 YEAR MANUFACTURERS GUARANTEE

Also featuring the Oregon 60 Curved Mirrored Cabinet

		Gloss White			Matt Moonlight Blue (MMB) / Matt Black (MB) / Matt Grey (MG) / Platinum Grey (PL) / Pearl Grey (PG)		
Oregon 60 Wall-Hung Combination	**Dimensions**	**Ref.**	**Exc. VAT**	**Inc. VAT**	**Ref.**	**Exc. VAT**	**Inc. VAT**
Oregon 60 2-Drawer Base Unit	590 x 470 x 500mm	ORE60BU-W	£693.00	**£831.60**	ORE60BU - MMB/MB/MG/PL/PG	£721.00	**£865.20**
Oregon 60 Resin Basin	606 x 480mm	OR60BS	£169.00	**£202.80**	OR60BS	£169.00	**£202.80**
Oregon 60 Wall-Hung Combination Total			£862.00	**£1,034.40**		**£890.00**	**£1,068.00**
Also Shown With:							
Oregon 60 Mirrored Cabinet	600 x 160 x 600mm	ORE60CAB-W	£212.00	**£254.40**	ORE60CAB - MMB/MB/MG/PL/PG	£222.00	**£266.40**
Charlotte Basin Mono inc. Waste	-	ASC8922W	£74.00	**£88.80**	ASC8922W	£74.00	**£88.80**
Also Available:							
Oregon 60 WC Base Unit	600 x 250 x 800mm	ORE60WCW	£282.00	**£338.40**	ORE60WC - MMB/MB/MG/PL/PG	£305.00	**£366.00**

Oregon 90

GENESIS DELUXE

2 YEAR MANUFACTURERS GUARANTEE

Available in Gloss White & Matt Moonlight Blue Finishes

Oregon 90 Base Unit & WC Combination

		Gloss White			Matt Moonlight Blue		
Oregon 90 Wall-Hung Combination	**Dimensions**	**Ref.**	**Exc. VAT**	**Inc. VAT**	**Ref.**	**Exc. VAT**	**Inc. VAT**
Oregon 90 2-Drawer Base Unit	890 x 475 x 500mm	ORE90BU-W	£827.00	**£992.40**	ORE90BU-MMB	£860.00	**£1,032.00**
Oregon 90 Resin Basin	900 x 480mm	OR90BS	£229.00	**£274.80**	OR90BS	£229.00	**£274.80**
Oregon 90 Wall-Hung Combination Total			£1,056.00	**£1,267.20**		**£1,089.00**	**£1,306.80**
Also Shown With:							
Oregon 60 WC Base Unit	600 x 250 x 800mm	ORE60WC-W	£282.00	**£338.40**	ORE60WC-MMB	£305.00	**£366.00**
Venice Rimless Back-to-Wall Pan &	Slim Soft Close Seat	VEN-M003	£267.00	**£320.00**	VEN-M003	£267.00	**£320.00**
Kansas Mirror with Integrated Light	*Installed Horizontally*	ASC6806-80	£235.00	**£282.00**	ASC6806-80	£235.00	**£282.00**
Charlotte Basin Mono inc. Waste	-	ASC8922W	£74.00	**£88.80**	ASC8922W	£74.00	**£88.80**
Ebony Towel Rail	1200 x 500mm	EBO-12X5	£193.00	**£231.60**	EBO-12X5	£193.00	**£231.60**
Genesis Concealed Cistern	-	GEN-CONC	£54.00	**£64.80**	GEN-CONC	£54.00	**£64.80**

GENESIS DELUXE

Oregon 120

Also featuring the Cornell 1200 Mirror with LED Lights

2 YEAR MANUFACTURERS GUARANTEE

Oregon 120 Double Basin Combination - Platinum Grey

		Gloss White			Platinum Grey (PL) / Pearl Grey (PG)		
Oregon 120 Combination	**Dimensions**	**Ref.**	**Exc. VAT**	**Inc. VAT**	**Ref.**	**Exc. VAT**	**Inc. VAT**
Oregon 120 2-Drawer Wall-Hung Base Unit	1190 x 478 x 500mm	ORE120BUW	£1,099.00	**£1,318.80**	ORE120BUPL/PG	£1,145.00	**£1,374.00**
Oregon 120 Double Resin Basin	1202 x 488mm	OR120BS1B	£408.00	**£489.60**	OR120BS1B	£408.00	**£489.60**
Oregon 120 Combination Total			**£1,507.00**	**£1,808.40**		**£1,553.00**	**£1,863.60**

Also Shown With:	**Dimensions**	**Ref.**	**Exc. VAT**	**Inc. VAT**
Cornell 120 Mirror with LED Lights	1200 x 700mm	ASC12340	£290.00	**£348.00**
2 x Montana Basin Mono's inc. Click-Clack Waste	-	ASC-8182AW	£150.00	**£180.00**

Monza 70 & 95

Available in Super Matt Denim and Cashmere Finishes and features a unique internal drawer

Monza 70 Combination in Denim Finish

Monza 95 Combination in Cashmere Finish

Internal Drawer Detail

		Super Matt Denim	Super Matt Cashmere		
Monza 70 Wall-Hung Combination	**Dimensions**	**Ref.**	**Ref.**	**Exc. VAT**	**Inc. VAT**
Monza 70 1-Drawer Wall-Hung Base Unit	705 x 500 x 503mm	MNZ70D	MNZ70CS	£775.00	**£930.00**
Monza 70 Basin	705 x 505mm	MNZ70BS	MNZ70BS	£237.00	**£284.40**
Monza 70 Wall-Hung Combination Total				**£1,012.00**	**£1,214.40**
Also Shown with:					
Monza 70 Mirror	700 x 600mm	n/a	MNZMIRC	£180.00	**£216.00**

Monza 95 Wall-Hung Combination	**Dimensions**	**Ref.**	**Ref.**	**Exc. VAT**	**Inc. VAT**
Monza 95 1-Drawer Wall-Hung Base Unit	955 x 500 x 505mm	MNZ95D	MNZ95C	£794.00	**£952.80**
Monza 95 Basin	955 x 505mm	MNZ95BS	MNZ95BS	£280.00	**£336.00**
Monza 95 Wall-Hung Combination Total				**£1,074.00**	**£1,288.80**

GENESIS DELUXE

Vermont 60 & 100

Available in High Gloss White with Push-to-Open Door & Drawers

2 YEAR MANUFACTURERS GUARANTEE

Vermont 60 Combination

Vermont 100 Combination with Opal Ceramic Basin - Gloss White

Vermont 100 Combination with Warwick Ceramic Basin - Gloss White

Gloss White

Vermont 60 Wall-Hung Combination	Dimensions	Ref.	Exc. VAT	Inc. VAT
Vermont 60 1-Drawer Wall-Hung Base Unit	600 x 510 x 400mm	VER60BUW	£338.00	**£405.60**
Helena Ceramic Sit-On Vanity Basin	600 x 370mm	CB247	£90.00	**£108.00**
Vermont 60 Wall-Hung Combination			**£428.00**	**£513.60**

Vermont 100 Wall-Hung Combination	Dimensions	Ref.	Exc. VAT	Inc. VAT
Vermont 100 1-Door, 1-Drawer Wall-Hung Base Unit	1000 x 510 x 400mm	VER1000BUW	£412.00	**£494.40**
Opal Ceramic Sit-On Vanity Basin*	445mm Round	CB772	£119.00	**£142.80**
Vermont 100 Wall-Hung Combination			**£531.00**	**£637.20**
*Alternative - Warwick Ceramic Sit-On Vanity Basin	420 x 420mm	CB014	£79.00	**£94.80**

Gemini 60

GENESIS DELUXE

2 YEAR MANUFACTURERS GUARANTEE

Available in Gloss White, Black Oak & Pearl Grey Finishes
Worktop Options Available for use with Sit-On Vanity Basins

Gemini 60 Combination - Black Oak Finish

Pearl Grey Finish

Gemini 60 with Worktop

		Gloss White			Pearl Grey (PG)			Black Oak (BO)		
Gemini 60 Combination	**Dimensions**	**Ref.**	**Exc. VAT**	**Inc. VAT**	**Ref.**	**Exc. VAT**	**Inc. VAT**	**Ref.**	**Exc. VAT**	**Inc. VAT**
Gemini 60 2-Drawer Base	590 x 455 x 500mm	GM60BW	£457.00	**£548.40**	GM60PG	£482.00	**£578.40**	GM60BO	£417.00	**£500.40**
Gemini 60 Resin Basin	600 x 460mm	GM60BS	£204.00	**£244.80**	GM60BS	£204.00	**£244.80**	GM60BS	£204.00	**£244.80**
Gemini 60 Combination Total			£661.00	**£793.20**		£686.00	**£823.20**		£621.00	**£745.20**
Also Shown With:										
Gemini 60 Mirrored Cabinet	600 x 160 x 600mm	N/A	-	-	GM60MCPG	£450.00	**£540.00**	GM60MCBO	£399.00	**£478.80**

Gemini 60 Worktop	**Dimensions**	**Ref.**	**Exc. VAT**	**Inc. VAT**	**Ref.**	**Exc. VAT**	**Inc. VAT**	**Ref.**	**Exc. VAT**	**Inc. VAT**
Gemini 60 2-Drawer Base	590 x 455 x 500mm	GM60BW	£457.00	**£548.40**	n/a	-	-	GM60BO	£417.00	**£500.40**
NEW Gemini 60 Worktop	600 x 460mm	GM60WTW	£106.00	**£127.20**	n/a	-	-	GM60WTBO	£87.00	**£104.40**
Aston Ceramic Vanity Basin	415 x 415mm	CB102	£85.00	**£102.00**	n/a	-	-	CB102	£85.00	**£102.00**
Gemini 60 Worktop Combination Total			£648.00	**£777.60**					£589.00	**£706.80**

GENESIS DELUXE

Gemini 120

Featuring Unique Integral Colour-Matched Basin Waste

2 YEAR MANUFACTURERS GUARANTEE

Gemini 120 Combination with 120 Worktop

Colour-Matched Basin Waste

Gemini 120 Combination with Double Resin Basin - Gloss White Finish

		Gloss White			Pearl Grey (PG)			Black Oak (BO)		
Gemini 120 Combination	**Dimensions**	**Ref.**	**Exc. VAT**	**Inc. VAT**	**Ref.**	**Exc. VAT**	**Inc. VAT**	**Ref.**	**Exc. VAT**	**Inc. VAT**
2 x Gemini 60 Base Units	1180 x 455 x 500mm	GM60BW	£914.00	**£1,096.80**	GM60PG	£964.00	**£1,156.80**	GM60BO	£834.00	**£1,000.80**
Gemini 120 Resin Basin	1200 x 460mm	GM12BS	£445.00	**£534.00**	GM12BS	£445.00	**£534.00**	GM12BS	£445.00	**£534.00**
Gemini 120 Combination Total			£1,359.00	**£1,630.80**		£1,409.00	**£1,690.80**		£1,279.00	**£1,534.80**

		Gloss White			Black Oak (BO)		
Gemini 120 Worktop Combination	**Dimensions**	**Ref.**	**Exc. VAT**	**Inc. VAT**	**Ref.**	**Exc. VAT**	**Inc. VAT**
2 x Gemini 60 2-Drawer Base Units	1180 x 455 x 500mm	GM60BW	£914.00	**£1,096.80**	GM60BO	£834.00	**£1,000.80**
Gemini 120 Worktop *(Not Pre-Cut for Basin)*	1200x 460 x 30mm	GM120WTW	£201.00	**£241.20**	GM120WTBO	£167.00	**£200.40**
2 x Warwick Ceramic Vanity Basins	420 x 420mm	CB014	£158.00	**£189.60**	CB014	£158.00	**£189.60**
Gemini 120 Worktop Combination Total			£1,273.00	**£1,527.60**		£1,159.00	**£1,390.80**

Modena 60

Now available in Matt Black finish

Modena 60 Combination
with 30 Column Option
Matt Black Finish

		Gloss White			Platinum Grey	Matt Black	
Modena 60 Wall-Hung Combination	**Dimensions**	**Ref.**	**Exc. VAT**	**Inc. VAT**	**Ref.**	**Exc. VAT**	**Inc. VAT**
Modena 60 1-Door, 2-Drawer Base	598 x 344 x 480mm	MOD60WHW	£335.00	**£402.00**	MOD60WHPL/MB	£367.00	**£440.40**
Q-Line 60 Square Resin Basin	600 x 350mm	QXLINE600	£175.00	**£210.00**	QXLINE600	£175.00	**£210.00**
Modena 60 Wall-Hung Combination Total			£510.00	**£612.00**		£542.00	**£650.40**

Also Shown With:

Modena 30 2-Door Tall Column	300 x 345 x 1550mm	MOD30CW	£414.00	**£496.80**	MOD30CPL/MB	£450.00	**£540.00**
Roma Basin Mono - Matt Black	-	QXRO05MB	£83.00	**£99.60**	QXRO05MG	£83.00	**£99.60**
Nevada Mirror with Integrated Light	600 x 400mm	ASC4060	£158.00	**£189.60**	ASC4060	£158.00	**£189.60**

GENESIS DELUXE

Modena 60

Contemporary handle-less design in Platinum Grey and Gloss White Finishes

2 YEAR MANUFACTURERS GUARANTEE

Modena 60 Combination with 30 Column Option - Platinum Grey Finish

Drawer/Door Detail

Q-Line 60 Basin

		Gloss White			Platinum Grey / Matt Black		
Modena 60 Wall-Hung Combination	**Dimensions**	**Ref.**	**Exc. VAT**	**Inc. VAT**	**Ref.**	**Exc. VAT**	**Inc. VAT**
Modena 60 1-Door, 2-Drawer Base	598 x 344 x 480mm	MOD60WHW	£335.00	**£402.00**	MOD60WHPL/MB	£367.00	**£440.40**
Q-Line 60 Square Resin Basin	600 x 350mm	QXLINE600	£175.00	**£210.00**	QXLINE600	£175.00	**£210.00**
Modena 60 Wall-Hung Combination Total			£510.00	**£612.00**		£542.00	**£650.40**
Also Shown With:							
Modena 30 2-Door Tall Column	300 x 345 x 1550mm	MOD30CW	£414.00	**£496.80**	MOD30CPL	£450.00	**£540.00**
Roma Basin Mono - Matt Grey	-	QXRO05MG	£94.00	**£112.80**	QXRO05MG	£94.00	**£112.80**
Nevada Mirror with Integrated Light	600 x 400mm	ASC4060	£158.00	**£189.60**	ASC4060	£158.00	**£189.60**

Zeto 60 & 120

GENESIS DELUXE

2 YEAR MANUFACTURERS GUARANTEE

Available in 2 Colour Finishes - Gloss White & Dusty Blue

Zeto 60 Combination - Gloss White Finish

Zeto 120 Combination - Dusty Blue Finish

		Gloss White			Dusty Blue		
Zeto 60 Combination	**Dimensions**	**Ref.**	**Exc. VAT**	**Inc. VAT**	**Ref.**	**Exc. VAT**	**Inc. VAT**
Zeto 60 2-Drawer Wall-Hung Base Unit	598 x 455 x 500mm	Z60BW	£377.00	£452.40	Z60BDB	£377.00	£452.40
Zeto 60 Resin Basin	605 x 460mm	Z60BS	£172.00	£206.40	Z60BS	£172.00	£206.40
Zeto 60 Combination Total			**£549.00**	**£658.80**		**£549.00**	**£658.80**
Zeto 120 Combination							
2 x Zeto 60 2-Drawer Wall-Hung Base Units	1196 x 455 x 500mm	Z60BW	£754.00	£904.80	Z60BDB	£754.00	£904.80
Gemini 120 Resin Basin	1200 x 460mm	GM12BS	£445.00	£534.00	GM12BS	£445.00	£534.00
Zeto 120 Combination Total			**£1,199.00**	**£1,438.80**		**£1,199.00**	**£1,438.00**
Alternative Basin Option							
Monica 120 Ceramic Basin	1210 x 465mm	CB3120D	£385.00	£462.00			

Zeto Base Units in Dusty Blue Finish include both Chrome and Brushed Brass Drawer Inserts

GENESIS DELUXE

Zeto 120

2 YEAR MANUFACTURERS GUARANTEE

Dusty Blue Finishes include with both Chrome and Brushed Brass Inserts

Zeto 120 Combination - Dusty Blue Finish

		Gloss White			Dusty Blue		
Zeto 120 Combination	**Dimensions**	**Ref.**	**Exc. VAT**	**Inc. VAT**	**Ref.**	**Exc. VAT**	**Inc. VAT**
2 x Zeto 60 2-Drawer Wall-Hung Base Units	1196 x 455 x 500mm	Z60BW	£754.00	**£904.80**	Z60BDB	£754.00	**£904.80**
2 x Opal Ceramic Vanity Basins	445 x 445mm	CB772	£238.00	**£285.60**	CB772	£238.00	**£285.60**
Gemini 120 Worktop - Gloss White	1200 x 460mm	GM120WTW	£201.00	**£241.20**	GM120WTW	£201.00	**£241.20**
Zeto 120 Combination Total			**£1,193.00**	**£1,431.60**		**£1,193.00**	**£1,431.60**

Also Shown With	**Dimensions**	**Ref.**	**Exc. VAT**	**Inc. VAT**
2 x Atlanta Tall Basin Mono - Brushed Brass	-	BC-6912BB	£276.00	**£331.20**

Zeto Base Units in Dusty Blue Finish include both Chrome and Brushed Brass Drawer Inserts

Douro 60

GENESIS DELUXE

2 YEAR MANUFACTURERS GUARANTEE

Available in two NEW Finishes - Dusty Blue and Forest Green

Douro 60 Combination - Dusty Blue Finish

Douro Framework

Atlanta Basin Mono

		Dusty Blue			Forest Green		
Douro 60 Combination	**Dimensions**	**Ref.**	**Exc. VAT**	**Inc. VAT**	**Ref.**	**Exc. VAT**	**Inc. VAT**
Douro 60 2-Drawer Base Unit	588 x 445 x 500mm	DO60BDB	£577.00	**£692.40**	DO60BFG	£577.00	**£692.40**
Monica 60 Resin Basin	600 x 460mm	M60BS	£164.00	**£196.80**	M60BS	£164.00	**£196.80**
Douro 60 Framework - Brushed Brass	800mm High	DOFRBB	£299.00	**£358.80**	DOFRBB	£299.00	**£358.80**
Douro 60 Combination Total			£1,040.00	**£1,248.00**		£1,040.00	**£1,248.00**

Also Shown With:

Cornell 60 Mirror with LED Light	600 x 700mm	ASC12338	£195.00	**£234.00**
Atlanta Basin Mono - Brushed Brass	-	BC-6922BB	£100.00	**£120.00**

GENESIS DELUXE

Douro 60

With Decor End Panels

2 YEAR MANUFACTURERS GUARANTEE

Douro 60 Combination - Forest Green Finish

		Dusty Blue			Forest Green		
Douro 60 Combination	**Dimensions**	**Ref.**	**Exc. VAT**	**Inc. VAT**	**Ref.**	**Exc. VAT**	**Inc. VAT**
Douro 60 2-Drawer Base Unit	588 x 445 x 500mm	DO60BDB	£577.00	**£692.40**	DO60BFG	£577.00	**£692.40**
Monica 60 Resin Basin	600 x 460mm	M60BS	£164.00	**£196.80**	M60BS	£164.00	**£196.80**
NEW Douro Decor End Panel	445 x 500mm	DO60SPDB	£50.00	**£60.00**	DO60SPFG	£50.00	**£60.00**
Douro 60 Combination Total			£791.00	**£949.20**		£791.00	**£949.20**

Alternative Basin Options:

Arizona 60 Ceramic Basin	610 x 460mm	AR60BAS	£95.00	**£114.00**
Porto 60 Ceramic Basin	600 x 460mm	CB5460	£169.00	**£202.80**
Gemini 60 Resin Basin	600 x 460mm	GM60BS	£204.00	**£244.80**
Zeto 60 Resin Basin	605 x 460mm	Z60BS	£172.00	**£206.40**

Milan 60

GENESIS DELUXE

2 YEAR MANUFACTURERS GUARANTEE

Available in Gloss & Wood Combinations

Milan 60 Combination - Gloss White/Pearl Grey Finish

Arizona 60 Ceramic Basin Option

Monica 60 Resin Basin Option

		Gloss White			Gloss White/ Pearl Grey		
Milan 60 Combination	**Dimensions**	**Ref.**	**Exc. VAT**	**Inc. VAT**	**Ref.**	**Exc. VAT**	**Inc. VAT**
Milan 60 2-Drawer Base Unit	595x455x500mm	MIL60BW	£517.00	**£620.40**	MIL60BPG	£402.00	**£482.40**
Arizona 60 Ceramic Basin	610 x 460mm	AR60BAS	£95.00	**£114.00**	AR60BAS	£95.00	**£114.00**
Milan 60 Combination Total			**£612.00**	**£734.40**		**£497.00**	**£596.40**

Alternative Basin Option	**Dimensions**	**Ref.**	**Exc. VAT**	**Inc. VAT**
Porto 60 Ceramic Basin	600 x 460	CB5460	£169.00	**£202.80**
Monica 60 Resin Basin	600 x 460mm	M60BS	£164.00	**£196.80**

Also Shown With:	**Dimensions**	**Ref.**	**Exc. VAT**	**Inc. VAT**
Charlotte 60 Mirror	600 x 800mm	ASC6800LY	£285.00	**£342.00**
Urban Basin Mono inc. Waste	-	ALP-9072W	£83.00	**£99.60**

Porto 60 Ceramic Basin

GENESIS DELUXE

Urban 40

2 YEAR MANUFACTURERS GUARANTEE

Now Available as a Floorstanding Option and in Pearl Grey Finish - **250mm Depth**

Urban 40 Floorstanding
Gloss White Finish

Urban 40 Wall-Hung
Gloss White Finish

		Gloss White			Pearl Grey (PG)	Platinum Grey (PL)	
Urban 40 Floorstanding Combination	**Dimensions**	**Ref.**	**Exc. VAT**	**Inc. VAT**	**Ref.**	**Exc. VAT**	**Inc. VAT**
Urban 40 1-Door Base Unit	390 x 245 x 800mm	UR40W	£163.00	**£195.60**	UR40PG/PL	£179.00	**£214.80**
Eden 40 Resin Basin	400 x 250mm	ED40BS	£76.00	**£91.20**	ED40BS	£76.00	**£91.20**
Urban 40 Floorstanding Combination			**£239.00**	**£286.80**		**£255.00**	**£306.00**
Also Shown With							
Bologna Mirror with LED Lights	395 x 600 x 140mm	QXM-G6	£147.00	**£176.40**			
Urban Basin Mono inc. Click-Clack Waste	-	ALP-9072W	£83.00	**£99.60**			

		Gloss White			Pearl Grey (PG)		
Urban 40 Wall-Hung Combination	**Dimensions**	**Ref.**	**Exc. VAT**	**Inc. VAT**	**Ref.**	**Exc. VAT**	**Inc. VAT**
Urban 40 1-Door Wall-Hung Base Unit	390 x 245 x 450mm	UR40WW	£154.00	**£184.80**	UR40WPG	£175.00	**£210.00**
Eden 40 Resin Basin	400 x 250mm	ED40BS	£76.00	**£91.20**	ED40BS	£76.00	**£91.20**
Urban 40 Wall-Hung Combination			**£230.00**	**£276.00**		**£251.00**	**£301.20**

Urban 90

GENESIS DELUXE

2 YEAR MANUFACTURERS GUARANTEE

Slimline Range - Just 250mm Deep

Urban 90 Floorstanding Combination
Pearl Grey Finish

Urban 90 Wall-Hung Combination
Textured Grey Walnut Finish

Eden 90 Basin

		Gloss White			Pearl Grey (PG)	Platinum Grey (PL)	
Urban 90 Floorstanding Combination	**Dimensions**	**Ref.**	**Exc. VAT**	**Inc. VAT**	**Ref.**	**Exc. VAT**	**Inc. VAT**
Urban 40 1-Door Base Unit*	390 x 245 x 800mm	UR40W	£163.00	**£195.60**	UR40PG/PL	£179.00	**£214.80**
Eden 50 Slimline WC Base Unit (No Top)	498 x 245 x 800mm	ED50SNOW	£173.00	**£207.60**	ED50WCNOPG/PL	£189.00	**£226.80**
Eden 90 1-Piece Resin Basin - Reversible	900 x 250mm	ED90BS	£200.00	**£240.00**	ED90BS	£200.00	**£240.00**
Urban 90 Floorstanding Combination			**£536.00**	**£643.20**		**£568.00**	**£681.60**

**Can also be used with the Eden 40 Base Units on p316-317*

		Gloss White			Textured Grey Walnut*		
Urban 90 Wall-Hung Combination	**Dimensions**	**Ref.**	**Exc. VAT**	**Inc. VAT**	**Ref.**	**Exc. VAT**	**Inc. VAT**
Urban 90 2-Door Wall Hung Base Unit	890 x 245 x 450mm	UR90W	£232.00	**£278.40**	UR90WN	£171.00	**£205.20**
Eden 90 1-Piece Resin Basin - Reversible	900 x 250mm	ED90BS	£200.00	**£240.00**	ED90BS	£200.00	**£240.00**
Urban 90 Wall-Hung Combination			**£432.00**	**£518.40**		**£371.00**	**£445.20**

 **Textured Walnut Finish - While Stocks Last*

GENESIS DELUXE

Urban 50 & 100 Combination

Now available at **350mm Standard Depth** with 1-Piece Basin Option

2 YEAR MANUFACTURERS GUARANTEE

Urban 50 Floorstanding Combination - Gloss White

Urban 100 WC Combination - Gloss White

		Gloss White			Pearl Grey (PG) / Platinum Grey (PL)		
Urban 50 Floorstanding	**Dimensions**	**Ref.**	**Exc. VAT**	**Inc. VAT**	**Ref.**	**Exc. VAT**	**Inc. VAT**
Urban 50 1-Door Base Unit	495 x 345 x 800mm	UR50W	£193.00	**£231.60**	UR50PG/PL	£211.00	**£253.20**
Q-Line 50 Square Resin Basin	500 x 350mm	QXLINE500	£154.00	**£184.80**	QXLINE500	£154.00	**£184.80**
Urban 50 Floorstanding Combination Total			**£347.00**	**£416.40**		**£365.00**	**£438.00**

Urban 100 Floorstanding WC	**Dimensions**	**Ref.**	**Exc. VAT**	**Inc. VAT**	**Ref.**	**Exc. VAT**	**Inc. VAT**
Urban 50 1-Door Base Unit	495 x 345 x 800mm	UR50W	£193.00	**£231.60**	UR50PG/PL	£211.00	**£253.20**
Urban 100 1-Piece Basin (Reversible)	1000 x 350mm	UR100BS	£303.00	**£363.60**	UR100BS	£303.00	**£363.30**
Urban 50 WC Base Unit (no top)	500 x 345 x 800mm	UR50WCNT	£182.00	**£218.40**	UR50WCNT	£196.00	**£235.20**
Urban 100 Floorstanding WC Combination Total			**£678.00**	**£813.60**		**£710.00**	**£852.00**

Also Shown With:

Monza Rimless Back-to-Wall Pan & Seat	-	MON-126B3	£319.00	**£382.80**
Urban Basin Mono inc Click-Clack Waste	-	ALP-9072W	£83.00	**£99.60**

Urban 60 &150 Combination

GENESIS DELUXE

2 YEAR MANUFACTURERS GUARANTEE

Now available in 600mm Width in Platinum Grey Finish

Urban 60 Floorstanding Combination - Platinum Grey

Urban 150 WC Combination - Platinum Grey

		Gloss White			Pearl Grey (PG)	Platinum Grey (PL)		
Urban 60 Floorstanding Combination	**Dimensions**	**Ref.**	**Exc. VAT**	**Inc. VAT**	**Ref.**	**Ref.**	**Exc. VAT**	**Inc. VAT**
Urban 60 2-Door Base Unit	590 x 345 x 800mm	UR60W	£223.00	**£267.60**	UR60PG	UR60PL	£240.00	**£288.00**
Q-Line 60 Square Resin Basin	600 x 350mm	QXLINE600	£175.00	**£210.00**	QXLINE600	QXLINE600	£175.00	**£210.00**
Urban 60 Floorstanding Combination Total			**£398.00**	**£477.60**			**£415.00**	**£498.00**

Urban 150 WC Combination	**Dimensions**	**Ref.**	**Exc. VAT**	**Inc. VAT**	**Ref.**	**Ref.**	**Exc. VAT**	**Inc. VAT**
Urban 60 2-Door Base Unit	590 x 345 x 800mm	UR60W	£223.00	**£267.60**	UR60PG	UR60PL	£240.00	**£288.00**
Urban 60 WC Base Unit with no top	600 x 345 x 800mm	UR60WCNTW	£212.00	**£254.40**	UR60WCNTPG	UR60WCNTPL	£225.00	**£270.00**
Urban 30 3-Drawer Base Unit	300 x 345 x 800mm	UR303DNTW	£433.00	**£519.60**	UR303DNTPG	UR303DNTPL	£458.00	**£549.60**
Q-Line 150 1-Piece Square Resin Basin (LH or RH) - *Shown Left Hand*	1500 x 350mm (420 max)	GQ1500SQ	£655.00	**£786.00**	GQ1500SQ	GQ1500SQ	£655.00	**£786.00**
Urban 150 WC Combination Total			**£1,523.00**	**£1,827.60**			**£1,578.00**	**£1,893.60**
Also Shown With:								
Eden 60 Mirrored Cabinet	600 x 160 x 600mm	ED60MCW	£282.00	**£338.40**	n/a	ED60MCPL	£316.00	**£379.20**
Arizona Back-to-Wall Pan & Soft Close Seat		ARIOLI-003	£257.00	**£308.00**	n/a	ARIOLI-003	£257.00	**£308.00**

GENESIS DELUXE

Urban 50 & 60 Wall-Hung

Available with Matt Black Framework for additional storage

QX 2 YEAR MANUFACTURERS GUARANTEE

Urban 50 Wall-Hung Base Unit - Pearl Grey Finish

Urban 60 Wall-Hung Base with Black Framework Option

NOTE: Urban Wall-Hung Base Units with Standard Basin options *(as pictured left)* is most suited for use with the QX Nano Ultra Compact Basin Click-Clack Waste:
Code: 30120520 £68.00 Exc. VAT, £81.60 Inc. VAT

		Gloss White			Textured Grey Walnut*			Pearl Grey (PG)		
Urban 50 Wall-Hung Combination	**Dimensions**	**Ref.**	**Exc. VAT**	**Inc. VAT**	**Ref.**	**Exc. VAT**	**Inc. VAT**	**Ref.**	**Exc. VAT**	**Inc. VAT**
Urban 50 1-Drawer W/Hung Base	490 x 450 x 250mm	UR50WHW	£293.00	**£351.60**	UR50WHWN	£237.00	**£284.40**	UR50WHPG	£322.00	**£386.40**
Monica 50 Resin Basin	500 x 460mm	M50BS	£156.00	**£187.20**	M50BS	£156.00	**£187.20**	M50BS	£156.00	**£187.20**
Urban 50 Wall-Hung Combination Total			**£449.00**	**£538.80**		**£393.00**	**£471.60**		**£478.00**	**£573.60**

Urban 60 W/Hung inc. Top & Frame	**Dimensions**	**Ref.**	**Exc. VAT**	**Inc. VAT**	**Ref.**	**Exc. VAT**	**Inc. VAT**	**Ref.**	**Exc. VAT**	**Inc. VAT**
Urban 60 1-Drawer W/Hung Base	590 x 450 x 250mm	UR60WHW	£318.00	**£381.60**	N/A	-	-	UR60WHPG	£350.00	**£420.00**
Urban 60 Worktop	600 x 450 x 30mm	UR60WTW	£104.00	**£124.80**	N/A	-	-	UR60WTPG	£115.00	**£138.00**
Portland Ceramic Vanity Basin	470 x 400mm	CB117	£107.00	**£128.40**	N/A	-	-	CB117	£107.00	**£128.40**
Urban 60 Frame - Matt Black		UR60FRM	£277.00	**£332.40**	N/A	-	-	UR60FRM	£277.00	**£332.40**
Urban 60 Wall-Hung Combination with Top Total			**£806.00**	**£967.20**					**£849.00**	**£1,018.80**

***Also Available**

Urban 120 Frame - Matt Black		UR120FRM	£434.00	**£520.80**

Alternative Basin Option for 60 Base Unit - Without Worktop

Arizona 60 Ceramic Basin	610 x 460mm	AR60BAS	£95.00	**£114.00**
Porto 60 Ceramic Basin	600 x 460mm	CB5460	£169.00	**£202.80**

Urban 120 Options

The Urban range offers a versatile 120 Option with the choice of One-Piece Double Basins or Colour-Matched Worktops with Counter Top Basins - **450mm Depth**

Units can be installed with or without Framework

Urban 120 Wall-Hung Combination with Ceramic Basin & Frame in Pearl Grey Finish

		Gloss White			Pearl Grey (PG)		
Urban 120 Wall-Hung Combination	**Dimensions**	**Ref.**	**Exc. VAT**	**Inc. VAT**	**Ref.**	**Exc. VAT**	**Inc. VAT**
2 x Urban 60 1-Drawer Base Units	1180 x 450 x 250mm	UR60WHW	£636.00	**£763.20**	UR60WHPG	£700.00	**£840.00**
Monica 120 Ceramic Double Basin	1210 x 465mm	CB3120D	£385.00	**£462.00**	CB3120D	£385.00	**£462.00**
Urban 120 Metal Frame - Black	1180 x 270mm	UR120FRM	£434.00	**£520.80**	UR120FRM	£434.00	**£520.80**
Urban 120 Wall-Hung Combination Total			**£1,455.00**	**£1,746.00**		**£1,528.00**	**£1,833.60**

Urban Units can be installed with a Colour-Matched Worktop for use with your choice of Vanity Basin

Description	**Ref.**	**Exc. VAT**	**Inc. VAT**
Urban 120 Worktop - Gloss White	UR12WTW	£201.00	**£241.20**
Urban 120 Worktop - Pearl Grey	UR12WTPG	£222.00	**£266.40**

Also Available

Urban 120 Frame - Matt Black	UR120FRM	£434.00	**£520.80**

Eden Corner - Semi-Modular

This unique corner combination can be combined with the Eden WC, 4-Drawer and 1-Door, 1-Drawer Units to create a semi-modular combination.

2 YEAR MANUFACTURERS GUARANTEE

Eden Corner Combination

Eden Semi-Modular Corner Combination

Gloss White

Eden Corner Combination	Dimensions	Ref.	Exc. VAT	Inc. VAT
Eden 60 1-Door Corner Base Unit	595 x 595 x 800mm	ED60CORN	£269.00	£322.80
Eden 60 Corner Resin Basin	600 x 600 x 440mm	ED60CORB	£233.00	£279.60
Eden Corner Combination			**£502.00**	**£602.40**

Eden Semi-Modular Corner Combination	Dimensions	Ref.	Exc. VAT	Inc. VAT
Eden 60 1-Door Corner Base Unit	595 x 595 x 800mm	ED60CORN	£269.00	£322.80
Eden 60 Corner Resin Basin	600 x 600 x 440mm	ED60CORB	£233.00	£279.60
Eden 30 1-Door, 1-Drawer Base Unit	300 x 345 x 800mm	ED301D1DW	£195.00	£234.00
Eden 30 4-Drawer Base Unit	300 x 345 x 800mm	ED404DW	£219.00	£262.80
Eden 60 WC Base Unit	600 x 345 x 800mm	ED60WCW	£206.00	£247.20
Eden Semi-Modular Corner Combination			**£1,122.00**	**£1,346.40**

Also Shown With:

Richmond Corner Mirrored Cabinet	323 x 323mm	CORCB	£168.00	£201.60

Eden 40

Available Floorstanding or Wall-Hung

Wall-Hung

Eden 40 Wall-Hung Slimline Combination	Dimensions	Gloss White Ref.	Exc. VAT	Inc. VAT	Matt Black Ref.	Exc. VAT	Inc. VAT
Eden 40 1-Door Wall-Hung Base	390 x 243 x 450mm	ED40WW	£166.00	£199.20	ED40WB	£188.00	£225.60
Eden 40 Resin Basin	400 x 250mm	ED40BS	£76.00	£91.20	ED40BS	£76.00	£91.20
Eden 40 Wall-Hung Slimline Combination			**£242.00**	**£290.40**		**£264.00**	**£316.80**

Floorstanding

Eden 40 Floorstanding Slimline Combination	Dimensions	Gloss White Ref.	Exc. VAT	Inc. VAT	Dusty Pink Ref.	Dusty Blue Ref.	Forest Green Ref.	Matt Black Ref.	Exc. VAT	Inc. VAT
Eden 40 2-Door Floorstanding Base Unit	390 x 245 x 800mm	ED40W	£173.00	£207.60	ED40DP	ED40DB	ED40FG	ED40MB	£188.00	£225.60
Eden 40 Resin Basin	400 x 250mm	ED40BS	£76.00	£91.20	ED40BS	ED40BS	ED40BS	ED40BS	£76.00	£91.20
Eden 40 Floorstanding Slimline Combination			**£249.00**	**£298.80**					**£264.00**	**£316.80**

Eden 40

Available in a number of colour options

2 YEAR MANUFACTURERS GUARANTEE

Eden 40 Basin Detail

Gloss White, Dusty Pink, Dusty Blue & Forest Green Floorstanding Units are supplied with Chrome Handles

Matt Black Floorstanding Units are supplied with Black Handles

Floorstanding

		Gloss White			Dusty Pink	Dusty Blue	Forest Green	Matt Black		
Eden 40 Floorstanding Slimline Combination	**Dimensions**	**Ref.**	**Exc. VAT**	**Inc. VAT**	**Ref.**	**Ref.**	**Ref.**	**Ref.**	**Exc. VAT**	**Inc. VAT**
Eden 40 2-Door Floorstanding Base Unit	390 x 245 x 800mm	ED40W	£173.00	£207.60	ED40DP	ED40DB	ED40FG	ED40MB	£188.00	£225.60
Eden 40 Resin Basin	400 x 250mm	ED40BS	£76.00	£91.20	ED40BS	ED40BS	ED40BS	ED40BS	£76.00	£91.20
Eden 40 Floorstanding Slimline Combination			**£249.00**	**£298.80**					**£264.00**	**£316.80**

Eden 50

50 Wall-Hung Combination and now including Platinum Grey Finish

Eden 50 Wall-Hung Combination

Eden 50 Slimline Combination with Square Basin

		Gloss White			Platinum Grey		
Eden 50 Wall-Hung Combination	**Dimensions**	**Ref.**	**Exc. VAT**	**Inc. VAT**	**Ref.**	**Exc. VAT**	**Inc. VAT**
Eden 50 1-Door Wall-Hung Base	490 x 344 x 500mm	ED50WW	£187.00	£224.40	ED50WPL	£203.00	£243.60
Q-Line 50 Square Resin Basin	500 x 350mm	QXLINE500	£154.00	£184.80	QXLINE500	£154.00	£184.80
Eden 50 Wall-Hung Combination - Square Basin			**£341.00**	**£409.20**		**£357.00**	**£428.40**
Combination Also Shown With:							
Utah Black Framed Mirror	500 x 600 x 30mm	ASC5060	£254.00	**£304.80**	ASC5060	£254.00	**£304.80**

Eden 50 Slimline Combination - Square Basin				
Eden 50 2-Door Slimline Base Unit	490 x 245 x 800mm	ED50SW	£171.00	£205.20
Q-Line 50 Slimline Square Resin Basin	500 x 250mm	QXLINESL50	£138.00	£165.60
Eden 50 Slimline Combination - Square Basin			**£309.00**	**£370.80**
Alternative Basin Options				
Eden 50 Curved Resin Basin	505 x 350mm (450 max)	ED50BS	£189.00	£226.80
Eden 50 Slimline Curved Resin Basin	505 x 250mm (350 max)	ED50SBS	£173.00	£207.60

**Textured Walnut Finish - While Stocks Last*

Eden 50

Available 250 & 350mm Deep in Gloss White & Distressed Wood Finishes

2 YEAR MANUFACTURERS GUARANTEE

NOTE: Curved Basins require the unit fascia to be cut as per the template provided

Eden 50 Combination - Curved Basin	Dimensions	Gloss White Ref.	Exc. VAT	Inc. VAT	Matt Moonlight Blue (MMB) Ref.	Exc. VAT	Inc. VAT
Eden 50 2-Door Base Unit	490 x 345 x 800mm	ED50W	£183.00	£219.60	ED50MMB/PL	£200.00	£240.00
Eden 50 Curved Resin Basin	505 x 350mm (450 max)	ED50BS	£189.00	£226.80	ED50BS	£189.00	£226.80
Eden 50 Combination - Curved Basin			**£372.00**	**£446.40**		**£389.00**	**£466.80**

Eden 100 WC Combination - Curved Basin	Dimensions	Gloss White Ref.	Exc. VAT	Inc. VAT	Platinum Grey (PL) Ref.	Exc. VAT	Inc. VAT
Eden 50 2-Door Base Unit	490 x 345 x 800mm	ED50W	£183.00	£219.60	ED50PL	£200.00	£240.00
Eden 50 Curved Resin Basin	505 x 350mm (450 max)	ED50BS	£189.00	£226.80	ED50BS	£189.00	£226.80
Eden 50 WC Base Unit	500 x 345 x 800mm	ED50WCW	£195.00	£234.00	ED50WCPL	£212.00	£254.40
Eden 100 WC Combination - Curved Basin			**£567.00**	**£680.40**		**£601.00**	**£721.20**

Also Available:	Dimensions	Gloss White Ref.	Textured Grey Walnut* Ref.	Exc. VAT	Inc. VAT	Platinum Grey Ref.	Exc. VAT	Inc. VAT
Q-Line 50 Square Resin Basin	500 x 350mm	QXLINE500	QXLINE500	£154.00	£184.80	n/a	n/a	n/a
Eden 50 Slimline 2-Door Base Unit	490 x 245 x 800mm	ED50SW	n/a	£171.00	£205.20	n/a	n/a	n/a
Eden 50 Slimline WC Base Unit	500 x 245 x 800mm	ED50SWCW	ED50SWCWN	£185.00	£222.00	n/a	n/a	n/a
Eden 50 WC Base Unit	500 x 345 x 800mm	ED50WCW	ED50WCWN	£195.00	£234.00	ED50WCPL	£212.00	£254.40
Eden 60 WC Base Unit	600 x 345 x 800mm	ED60WCW	ED60WCWN	£206.00	£247.20	ED60WCPL	£223.00	£267.60
Eden 60 Slimline WC Base Unit	600 x 245 x 800mm	ED60SWCW	ED60SWCWN	£190.00	£228.00	n/a	n/a	n/a

2 Year Manufacturers Guarantee **Textured Walnut Finish - While Stocks Last*

Eden 60

Available 250 & 350mm Deep
350mm Depth Unit available in Gloss White, Matt Moonlight Blue & Platinum Grey Finishes

Eden 60 Standard Depth Combination with Square Basin - Gloss White Finish

Eden 60 Slimline Combination with Curved Basin - Gloss White Finish

		Gloss White			Matt Moonlight Blue (MMB) / Platinum Grey (PL)		
Eden 60 Combination - Square Basin	**Dimensions**	**Ref.**	**Exc. VAT**	**Inc. VAT**	**Ref.**	**Exc. VAT**	**Inc. VAT**
Eden 60 2-Door Base Unit	590 x 345 x 800mm	ED60W	£199.00	£238.80	ED60MMB/PL	£218.00	£261.60
Q-Line 60 Square Resin Basin	600 x 350mm	QXLINE600	£175.00	£210.00	QXLINE600	£175.00	£210.00
Eden 60 Combination - Square Basin			**£374.00**	**£448.80**		**£393.00**	**£471.60**

Eden 60 Slimline Combination - Curved Basin				
Eden 60 2-Door Slimline Base Unit	590 x 245 x 800mm	ED60SW	£194.00	£232.80
Eden 60 Slimline Curved Resin Basin	605 x 250mm (344 max)	ED60SBS	£211.00	£253.20
Eden 60 Slimline Combination - Curved Basin			**£405.00**	**£486.00**

Eden 120 WC Combination - Round Basin							
Eden 60 2-Door Base Unit	590 x 345 x 800mm	ED60W	£199.00	£238.80	ED60MMB/PL	£218.00	£261.60
Eden 60 Curved Resin Basin	605 x 350mm (450 max)	ED60BS	£229.00	£274.80	ED60BS	£229.00	£274.80
Eden 60 WC Base Unit	600 x 345 x 800mm	ED60WCW	£206.00	£247.20	ED60WCPL	£223.00	£267.60
Eden 120 WC Combination - Round Basin			**£634.00**	**£760.80**		**£670.00**	**£804.00**

Eden 70, 80 & 100

70, 80 & 100 Unit Fascias are Pre-Cut for Curved Fronted Basins

Gloss White

Eden 70 Combination	Dimensions	Ref.	Exc. VAT	Inc. VAT
Eden 70 2-Door Base Unit	690 x 345 x 800mm	ED70BW	£256.00	£307.20
Eden 70 Curved Resin Basin	705 x 350mm (450 max)	ED70BS	£259.00	£310.80
Combination Total			**£515.00**	**£618.00**
Also Shown With:				
Opal Basin Mono inc. Click-Clack Waste		ASC-8622W	£88.00	**£105.60**

Gloss White

Eden 80 Combination	Dimensions	Ref.	Exc. VAT	Inc. VAT
Eden 80 3-Door, 1-Drawer Base	790 x 345 x 800mm	ED80BW	£290.00	£348.00
Eden 80 Curved Resin Basin	805 x 350mm (450 max)	ED80BS	£281.00	£337.20
Combination Total			**£571.00**	**£585.20**
Also Available				
Eden 80 2-Door Mirrored Cabinet	800 x 160 x 600mm	ED80MCW	£315.00	£378.00

The 80 Combination is compatible with WC Units, 4-Drawer & 1-Door, 1-Drawer Base Units on p327

Gloss White

Eden 100 Combination	Dimensions	Ref.	Exc. VAT	Inc. VAT
Eden 100 2-Door, 3-Drawer Base	990 x 345 x 800mm	ED100BW	£392.00	£470.40
Eden 100 Curved Resin Basin	1005 x 350mm (450 max)	ED100BS	£334.00	£400.80
Combination Total			**£726.00**	**£871.20**
Also Available:				
Eden 100 3-Door Mirrored Cabinet	1000 x 160 x 600mm	ED100MCW	£292.00	£350.40

The 100 Combination is compatible with WC Units, 4-Drawer & 1-Door, 1-Drawer Base Units on p327

Eden 100 & 120 Serene

GENESIS DELUXE

2 YEAR MANUFACTURERS GUARANTEE

Serene Resin Basin available 100 or 120 wide

Eden 120 with Serene 120 Basin - Pictured Left Hand

Serene 120 Resin Basin

Kansas Basin Mono

		Gloss White			Platinum Grey (PL)		
Eden 100 Serene Combination	**Dimensions**	**Ref.**	**Exc. VAT**	**Inc. VAT**	**Ref.**	**Exc. VAT**	**Inc. VAT**
Eden 50 2-Door Base Unit	490 x 345 x 800mm	ED50W	£183.00	£219.60	ED50PL	£200.00	£240.00
Urban 50 WC Base Unit with no top	500 x 345 x 800mm	UR50WCNTW	£182.00	£218.40	UR50WCNTPL	£196.00	£235.20
Serene 100 1-Piece Resin Basin - LH or RH	1000 x 350mm (470 max)	S100BAS	£362.00	£434.40	S100BAS	£362.00	£434.40
Eden 100 Serene Combination Total			**£727.00**	**£872.40**		**£758.00**	**£909.60**

Eden 120 Serene Combination	**Dimensions**	**Ref.**	**Exc. VAT**	**Inc. VAT**	**Ref.**	**Exc. VAT**	**Inc. VAT**
Eden 60 2-Door Base Unit	590 x 345 x 800mm	ED60W	£199.00	£238.80	ED60PL	£218.00	£261.60
Urban 60 WC Base Unit with no top	600 x 345 x 800mm	UR60WCNTW	£212.00	£254.40	UR60WCNTPL	£225.00	£270.00
Serene 120 1-Piece Resin Basin - LH or RH	1200 x 350mm (470 max)	S120BAS	£428.00	£513.00	S120BAS	£428.00	£513.00
Eden 120 Serene Combination Total			**£839.00**	**£1,006.20**		**£871.00**	**£1,044.60**

Eden Square 1-Piece

Square 1-Piece Basins - Available Left or Right Hand
Available 1000mm or 1200mm

Eden 120 Square 1-Piece Basin Combination
Gloss White - Pictured Left Hand

		Gloss White			Matt Moonlight Blue (MMB) / Platinum Grey (PL)		
Eden 100 1-Piece Basin Combination	**Dimensions**	**Ref.**	**Exc. VAT**	**Inc. VAT**	**Ref.**	**Exc. VAT**	**Inc. VAT**
Eden 50 2-Door Base Unit	490 x 345 x 800mm	ED50W	£183.00	£219.60	ED50MMB/PL	£200.00	£240.00
Eden 50 Slimline WC Base Unit with no top*	498 x 245 x 800mm	ED50SNOW	£173.00	£207.60	ED50SNOWMB/PL	£189.00	£226.80
Q-Line 100 Square 1-Piece Resin Basin (LH or RH) - *Shown Left Hand*	1000 x 250mm (350 max)	GQ1000SQ	£360.00	£432.00	GQ1000SQ	£360.00	£432.00
Eden 100 1-Piece Basin Combination			**£716.00**	**£859.20**		**£749.00**	**£898.80**

Eden 120 1-Piece Basin Combination	**Dimensions**	**Ref.**	**Exc. VAT**	**Inc. VAT**	**Ref.**	**Exc. VAT**	**Inc. VAT**
Eden 60 2-Door Base Unit	590 x 345 x 800mm	ED60W	£199.00	£238.80	ED60MMB/PL	£218.00	£261.60
Eden 60 Slimline WC Base Unit with no top*	598 x 245 x 800mm	ED60SNOW	£176.00	£211.20	ED60SNOMB/PL	£192.00	£230.40
Q-Line 120 Square 1-Piece Resin Basin (LH or RH) - *Shown Left Hand*	1200 x 250mm (350 max)	GQ1200SQ	£402.00	£482.40	GQ1200SQ	£402.00	£482.40
Eden 120 1-Piece Basin Combination			**£777.00**	**£932.40**		**£812.00**	**£974.40**

**For Use with 1-Piece Basins Only*

Eden 150 1-Piece Curved Basin

GENESIS

Curved 1-Piece Basin - Available Left or Right Hand

Eden 150 1-Piece Curved Basin Combination - Gloss White
Pictured Left Hand

Eden 150 1-Piece Curved Basin Combination	Dimensions	Gloss White Ref.	Exc. VAT	Inc. VAT
Eden 60 2-Door Base Unit	590 x 345 x 800mm	ED60W	£199.00	£238.80
Eden 30 1-Door, 1-Drawer Base with no top*	300 x 345 x 800mm	ED301DNTW	£186.00	£223.20
Eden 60 WC Base Unit with no top*	598 x 345 x 800mm	ED60WCNOW	£191.00	£229.20
Q-Line 150 1-Piece Curved Resin Basin (LH or RH) - *Shown Left Hand*	1500 x 350mm (450 max)	GQ1500RN	£592.00	£710.40
Eden 150 1-Piece Curved Basin Combination			**£1,168.00**	**£1,401.60**

**For use with 1-Piece Basins only*

Also Shown With:	Ref.	Exc. VAT	Inc. VAT
Charlotte Basin Mono inc. Click-Clack Waste	ASC-8922W	£74.00	**£88.80**

WC Base Unit Does Not Include Cistern:			
Genesis Concealed Cistern - Dual Flush	GEN-CONC	£54.00	£64.80

Eden 150 1-Piece Square Basin

Square 1-Piece Basin - Available Left or Right Hand
Now available in Matt Moonlight Blue Finish

2 YEAR MANUFACTURERS GUARANTEE

Eden 150 1-Piece Square Basin Combination - Mat Moonlight Blue
Pictured Right Hand

		Gloss White			Matt Moonlight Blue		
Eden 150 1-Piece Square Basin Combination	**Dimensions**	**Ref.**	**Exc. VAT**	**Inc. VAT**	**Ref.**	**Exc. VAT**	**Inc. VAT**
Eden 60 2-Door Base Unit	590 x 345 x 800mm	ED60W	£199.00	£238.80	ED60MMB	£218.00	£261.60
Eden 30 2-Drawer Roll Holder	300 x 345 x 800mm	ED30RW	£297.00	£356.40	ED30RMB	£319.00	£382.80
Eden 60 WC Base Unit with no top*	598 x 345 x 800mm	ED60WCNOW	£191.00	£229.20	ED60WCNOMB	£191.00	£229.20
Q-Line 150 1-Piece Square Resin Basin (LH or RH) - *Shown Right Hand*	1500 x 350mm (420 max)	GQ1500SQ	£655.00	£786.00	GQ1500SQ	£655.00	£786.00
Eden 150 1-Piece Square Basin Combination			**£1,342.00**	**£1,610.40**		**£1,383.00**	**£1,659.60**

**For use with 1-Piece Basins only*

Also Shown With:	**Ref.**	**Exc. VAT**	**Inc. VAT**
Nevada Back-to-Wall Pan Only	NEV-TR05	£179.00	£214.80
Nevada Soft Close Seat	NEV-TR08	£48.00	£57.60

Eden 120

The 120 Combination is compatible with WC Units, 4-Drawer & 1-Door, 1-Drawer Base Units on p327

Eden 120 Double Resin Basin

Eden 120 Double Basin Combination - Gloss White

Eden 120 Combination	Dimensions	Ref. (Gloss White)	Exc. VAT	Inc. VAT
Eden 120 4-Door, 3-Drawer Base Unit	1190 x 345 x 800mm	ED120BW	£455.00	£546.00
Eden 120 Double Curved Resin Basin	1203 x 350mm (450 max)	ED120BS	£461.00	£553.20
Eden 120 Combination			**£916.00**	**£1,099.20**
Also Shown With:				
Eden 120 3-Door Mirrored Cabinet	1200 x 160 x 600mm	ED120MCW	£335.00	£402.00

Eden 180 Semi-Modular

Full combination shown below is only available in 350mm Depth

2 YEAR MANUFACTURERS GUARANTEE

Eden 180, 350mm Depth WC Combination - Gloss White

Eden 180 WC Combination	Dimensions	Gloss White Ref.	Exc. VAT	Inc. VAT
Eden 60 2-Door Base Unit	590 x 345 x 800mm	ED60W	£199.00	£238.80
Q-Line 60 Square Resin Basin	600 x 350mm	QXLINE600	£175.00	£210.00
Eden 60 WC Base Unit	600 x 345 x 800mm	ED60WCW	£206.00	£247.80
Eden 30 4-Drawer Base Unit	300 x 345 x 800mm	ED304DW	£219.00	£262.80
Eden 30 1-Door, 1-Drawer Base Unit	300 x 345 x 800mm	ED301D1DW	£195.00	£234.00
Eden 180 WC Combination			**£994.00**	**£1,193.40**

Also Shown With:	Ref.	Exc. VAT	Inc. VAT
Ebony Back-to-Wall Pan Only	BH21	£146.00	£175.20
Ebony Standard Seat Only	108051	£24.00	£28.80

Curved Basin Specifications

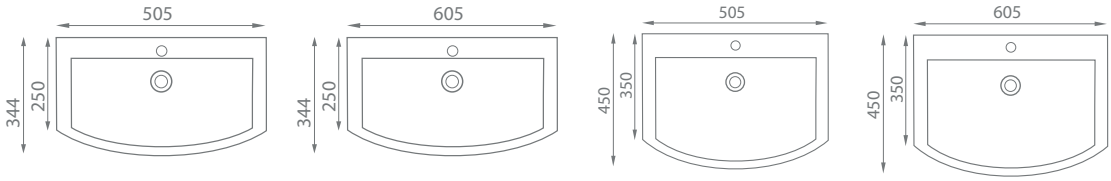

Monica 50 & 60 2-Door Combination - Gloss White

Monica 60 2-Drawer Combination with Nostalgic Basin Option

Monica 75 2-Door Combination - Gloss White

Monica 90 3-Door, 2-Drawer Combination - Gloss White

Monica 50, 60, 75 & 90

Monica 50 & 60 Combination with a number of Basin options

Monica 50 2-Door Combination	Dimensions	Ref. (Gloss White)	Exc. VAT	Inc. VAT	Ref. (Matt Black (MB) / Forest Green (FG))	Exc. VAT	Inc. VAT
Monica 50 2-Door Base Unit	490 x 450 x 800mm	M50BW	£199.00	£238.80	M50BMB/FG	£210.00	£252.00
Monica 50 Resin Basin	500 x 460mm	M50BS	£156.00	£187.20	M50BS	£156.00	£187.20
Combination Total			**£355.00**	**£426.00**		**£366.00**	**£439.20**

Monica 60 2-Door Combination	Dimensions	Ref.	Exc. VAT	Inc. VAT	Ref.	Exc. VAT	Inc. VAT
Monica 60 2-Door Base Unit	590 x 450 x 800mm	M60BW	£213.00	£255.60	M60BMB/FG	£243.00	£291.60
Arizona 60 Ceramic Basin*	610 x 460mm	AR60BAS	£95.00	£114.00	AR60BAS	£95.00	£114.00
Combination Total			**£308.00**	**£369.60**		**£338.00**	**£405.60**

**Arizona Basin pictured left*

Alternative Basin Options	Dimensions	Ref.	Exc. VAT	Inc. VAT
Monica 60 Resin Basin	600 x 460mm	M60BS	£164.00	£196.80
Porto 60 Ceramic Basin	600 x 460mm	CB5460	£169.00	£202.80

Also Available:	Dimensions	Ref.	Exc. VAT	Inc. VAT
Monica 60 WC Base Unit	600 x 450 x 800mm	M60WCW	£193.00	£231.60

Monica 60 Nostalgic Basin Combination	Dimensions	Ref. (Gloss White)	Exc. VAT	Inc. VAT
Monica 60 2-Drawer Base Unit	590 x 450 x 800mm	M602DBW	£426.00	£511.20
Nostalgic 60 Ceramic Basin	610 x 465mm	CB8060C	£109.00	£130.80
Combination Total			**£535.00**	**£642.00**

Alternative Basin Option				
Monica 60 Resin Basin	600 x 460mm	M60BS	£164.00	£196.80
Porto 60 Ceramic Basin	600 x 460mm	CB5460	£169.00	£202.80

Monica 75 2-Door Combination	Dimensions	Ref. (Gloss White)	Exc. VAT	Inc. VAT
Monica 75 2-Door Base Unit	742 x 450 x 800mm	M75B	£252.00	£302.40
Monica 75 Resin Basin	750 x 460mm	M75BS	£176.00	£211.20
Combination Total			**£428.00**	**£513.60**

Porto Ceramic Basin available in 60 & 90

Monica 90 3-Door, 2-Drawer Combination	Dimensions	Ref. (Gloss White)	Exc. VAT	Inc. VAT
Monica 90 3-Door, 2-Drawer Base Unit	892 x 450 x 800mm	M90B	£377.00	£452.40
Monica 90 Resin Basin	900 x 460mm	M90BS	£218.00	£261.60
Combination Total			**£595.00**	**£714.00**

Alternative Basin Option				
Porto 90 Ceramic Basin	905 x 460mm	CB5490	£321.00	£385.20

Monica 120

Create a 120 Combination with either 2 x 60 Base Units or by introducing a Monica WC Base Unit for a semi-modular application

Monica 120 WC Combination - Gloss White

Monica 120 2-Drawer Double Basin Combination

Monica 120 WC Combination	Dimensions	Ref. (Gloss White)	Exc. VAT	Inc. VAT
Monica 60 2-Door Base Unit	590 x 450 x 800mm	M60BW	£213.00	£255.60
Monica 60 Resin Basin	600 x 460mm	M60BS	£164.00	£196.80
Monica 60 WC Base Unit*	600 x 450 x 800mm	M60WCW	£193.00	£231.60
Monica 120 WC Combination			**£570.00**	**£684.00**

WC Unit DOES NOT Include Cistern

Monica 120 2-Drawer Double Basin Combination				
2 x Monica 60 2-Drawer Base Units	1180 x 450 x 800mm	M602DBW	£852.00	£1,022.40
Monica 120 Ceramic Basin	1210 x 465mm	CB3120D	£385.00	£462.00
Monica 120 2-Drawer Double Basin Combination			**£1,237.00**	**£1,484.40**
Also Shown With:				
2 x Roma Mirrors with LED Lights	400 x 800mm	ASC4805-40	£400.00	**£480.00**
2 x Verona Basin Mono's inc. Click-Clack Waste	-	VR05CP	£340.00	**£408.00**

Monica 50 & 60 2-Door

Available in 50 & 60 in Matt Black and Forest Green

Monica 50 Base Unit - Matt Black Finish

Monica 60 Base Unit - Forest Green Finish

		Gloss White			Matt Black (MB)	Forest Green (FG)	
Monica 50 Combination	**Dimensions**	**Ref.**	**Exc. VAT**	**Inc. VAT**	**Ref.**	**Exc. VAT**	**Inc. VAT**
Monica 50 2-Door Base Unit	490 x 450 x 800mm	M50BW	£199.00	£238.80	M50BMB/FG	£210.00	£252.00
Monica 50 Resin Basin	500 x 460mm	M50BS	£156.00	£187.20	M50BS	£156.00	£187.20
Monica 50 Combination			**£355.00**	**£426.00**		**£366.00**	**£439.20**
Monica 60 Combination	**Dimensions**	**Ref.**	**Exc. VAT**	**Inc. VAT**	**Ref.**	**Exc. VAT**	**Inc. VAT**
Monica 60 2-Door Base Unit	590 x 450 x 800mm	M60BW	£213.00	£255.60	M60BMB/FG	£243.00	£291.60
Monica 60 Resin Basin	600 x 460mm	M60BS	£164.00	£196.80	M60BS	£164.00	£196.80
Monica 60 Combination			**£377.00**	**£452.40**		**£407.00**	**£488.40**

Gloss White & Forest Green Units are supplied with Chrome Handles - Matt Black Units are supplied with Black Handles

Alternative Handles:				
Monica Black Handles (each)	-	MHNDBK	£13.00	£15.60
Monica Chrome Handles (each)	-	MHNDCP	£13.00	£15.60

Also suitable for use with Q-Line Handle Options See p351

Monica 100 & 120 1-Piece

GENESIS

2 YEAR MANUFACTURERS GUARANTEE

Now Available in Matt Black & Forest Green Finishes - **460mm Maximum Depth**

Monica 100 1-Piece Resin Basin Combination in Gloss White - Shown Left Hand

Monica 120 1-Piece Basin Combination

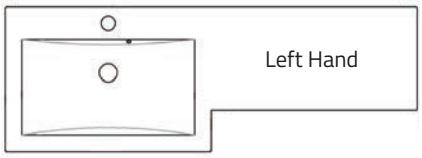

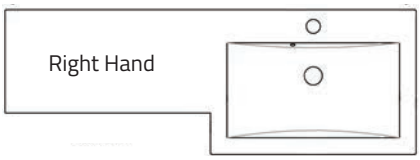

		Gloss White			Matt Black (MB)	Forest Green (FG)	
Monica 100 1-Piece Basin Combination	**Dimensions**	**Ref.**	**Exc. VAT**	**Inc. VAT**	**Ref.**	**Exc. VAT**	**Inc. VAT**
Monica 50 2-Door Base Unit	490 x 450 x 800mm	M50BW	£199.00	£238.80	M50BMB/FG	£210.00	£252.00
Monica 100 1-Piece Resin Basin (LH or RH)	1000 x 260mm (460 max)	M1001P	£352.00	£422.40	M1001P	£352.00	£422.40
Monica 50 Slim WC Base Unit with no top*	499 x 250 x 800mm	M50WC1PW	£173.00	£207.60	M50WC1PMB/FG	£181.00	£217.20
Monica 100 1-Piece Basin Combination			**£724.00**	**£868.80**		**£743.00**	**£891.60**

** For use with 1-Piece Basin Only*

Monica 120 1-Piece Basin Combination	**Dimensions**	**Ref.**	**Exc. VAT**	**Inc. VAT**	**Ref.**	**Exc. VAT**	**Inc. VAT**
Monica 60 2-Door Base Unit	590 x 450 x 800mm	M60BW	£213.00	£255.60	M60BMB/FG	£243.00	£291.60
Monica 120 1-Piece Resin Basin (LH or RH)	1200 x 260mm (460 max)	M1201P	£381.00	£457.20	M1201P	£381.00	£457.20
Monica 60 Slim WC Base Unit with no top*	600 x 250 x 800mm	M60WC1PW	£187.00	£224.40	M60WC1PMB/FG	£195.00	£234.00
Monica 120 1-Piece Basin Combination			**£781.00**	**£937.20**		**£819.00**	**£982.80**

** For use with 1-Piece Basin Only*

Monica 100 & 120 1-Piece

Available in Matt Black & Forest Green Finishes

2 YEAR MANUFACTURERS GUARANTEE

Monica 100 1-Piece Combination - Matt Black Finish

Monica Black Handles

Monica Chrome Handles

		Gloss White			Matt Black (MB) / Forest Green (FG)		
Monica 100 1-Piece Basin Combination	**Dimensions**	**Ref.**	**Exc. VAT**	**Inc. VAT**	**Ref.**	**Exc. VAT**	**Inc. VAT**
Monica 50 2-Door Base Unit	490 x 450 x 800mm	M50BW	£199.00	£238.80	M50BMB/FG	£210.00	£252.00
Monica 100 1-Piece Resin Basin (LH or RH)	1000 x 260mm (460 max)	M1001P	£352.00	£422.40	M1001P	£352.00	£422.40
Monica 50 Slim WC Base Unit with no top*	499 x 250 x 800mm	M50WC1PW	£173.00	£207.60	M50WC1PMB/FG	£181.00	£217.20
Monica 100 1-Piece Basin Combination			**£724.00**	**£868.80**		**£743.00**	**£891.60**

** For use with 1-Piece Basin Only*

Monica 120 1-Piece Basin Combination	**Dimensions**	**Ref.**	**Exc. VAT**	**Inc. VAT**	**Ref.**	**Exc. VAT**	**Inc. VAT**
Monica 60 2-Door Base Unit	590 x 450 x 800mm	M60BW	£213.00	£255.60	M60BMB/FG	£243.00	£291.60
Monica 120 1-Piece Resin Basin (LH or RH)	1200 x 260mm (460 max)	M1201P	£381.00	£457.20	M1201P	£381.00	£457.20
Monica 60 Slim WC Base Unit with no top*	600 x 250 x 800mm	M60WC1PW	£187.00	£224.40	M60WC1PMB/FG	£195.00	£234.00
Monica 120 1-Piece Basin Combination			**£781.00**	**£937.20**		**£819.00**	**£982.80**

** For use with 1-Piece Basin Only*

Gloss White & Forest Green Units are supplied with Chrome Handles - Matt Black Units are supplied with Black Handles

Alternative Handles can be purchased separately (each) £13.00 Exc. VAT **£15.60** Inc. VAT

Also suitable for use with Q-Line Handle Options - See p351

Monica 100 & 120 1-Piece

GENESIS

2 YEAR MANUFACTURERS GUARANTEE

Now Available in NEW Matt Black & Forest Green Finishes - **460mm Maximum Depth**

Monica 120 1-Piece Combination - Forest Green Finish

		Gloss White			Matt Black (MB) / Forest Green (FG)		
Monica 100 1-Piece Basin Combination	**Dimensions**	**Ref.**	**Exc. VAT**	**Inc. VAT**	**Ref.**	**Exc. VAT**	**Inc. VAT**
Monica 50 2-Door Base Unit	490 x 450 x 800mm	M50BW	£199.00	£238.80	M50BMB/FG	£210.00	£252.00
Monica 100 1-Piece Resin Basin (LH or RH)	1000 x 260mm (460 max)	M1001P	£352.00	£422.40	M1001P	£352.00	£422.40
Monica 50 Slim WC Base Unit with no top*	499 x 250 x 800mm	M50WC1PW	£173.00	£207.60	M50WC1PMB/FG	£181.00	£217.20
Monica 100 1-Piece Basin Combination			**£724.00**	**£868.80**		**£743.00**	**£891.60**

** For use with 1-Piece Basin Only*

Monica 120 1-Piece Basin Combination	**Dimensions**	**Ref.**	**Exc. VAT**	**Inc. VAT**	**Ref.**	**Exc. VAT**	**Inc. VAT**
Monica 60 2-Door Base Unit	590 x 450 x 800mm	M60BW	£213.00	£255.60	M60BMB/FG	£243.00	£291.60
Monica 120 1-Piece Resin Basin (LH or RH)	1200 x 260mm (460 max)	M1201P	£381.00	£457.20	M1201P	£381.00	£457.20
Monica 60 Slim WC Base Unit with no top*	600 x 250 x 800mm	M60WC1PW	£187.00	£224.40	M60WC1PMB/FG	£195.00	£234.00
Monica 120 1-Piece Basin Combination			**£781.00**	**£937.20**		**£819.00**	**£982.80**

** For use with 1-Piece Basin Only*

Gloss White & Forest Green Units are supplied with Chrome Handles - Matt Black Units are supplied with Black Handles

Alternative Handles can be purchased separately (each) £13.00 Exc. VAT **£15.60** Inc. VAT

Also suitable for use with Q-Line Handle Options - See p351

Monica 120 3-Drawer 1-Piece Basin

2 YEAR MANUFACTURERS GUARANTEE

Monica 120 Combination can be created using 60 2-Door, 2-Drawer or 3-Drawer Base Units with 60 Slim WC Base Unit & 120 1-Piece Basin (Handed)

Monica 120 3-Drawer 1-Piece Resin Basin Combination - Shown Left Hand

Monica 120 3-Drawer 1-Piece Basin Combination	Dimensions	Gloss White Ref.	Exc. VAT	Inc. VAT
Monica 60 3-Drawer Base Unit	590 x 450 x 800mm	M603DBW	£518.00	£621.00
Monica 120 1-Piece Resin Basin (LH or RH)	1200 x 260mm (460 max)	M1201P	£381.00	£457.20
Monica 60 Slim WC Base Unit with no top*	600 x 250 x 800mm	M60WC1PW	£187.00	£224.40
Monica 120 3-Drawer 1-Piece Basin Combination			**£1,086.00**	**£1,302.60**

** For use with 1-Piece Basin Only*

Also Shown With:				
Charlotte Back-to-Wall Pan Only	-	CHASOP-003	£188.00	**£225.60**
Arizona/Charlotte Slim Soft Close Seat	-	ARCH-004	£79.00	**£94.80**
Charlotte Basin Mono inc. Click-Clack Waste	-	ASC-8922W	£74.00	**£88.80**
WC Unit DOES NOT Include Cistern				
Genesis Concealed Cistern - Dual Flush	-	GEN-CONC	£54.00	£64.80

Monica 60 with Top

The Monica 60 Worktop enables you the flexibility to create a Counter-Top Basin Furniture Combination - Available in two colour finishes

Monica 60 2-Door Base Unit with 60 Worktop & Oregon 570 Basin

Oregon 620 Ceramic Counter-Top Basin

Ebony 545 x 405 Square Ceramic Counter-Top Basin

Alternative Worktop Finishes:

Black Gloss

Gloss White

		Gloss White			Matt Black (MB)	Forest Green (FG)	
Monica 60 with Worktop Combination	**Dimensions**	**Ref.**	**Exc. VAT**	**Inc. VAT**	**Ref.**	**Exc. VAT**	**Inc. VAT**
Monica 60 2-Door Base Unit	590 x 450 x 800mm	M60BW	£213.00	£255.60	M60BMB/FG	£243.00	£291.60
Monica 60 Worktop - Black Gloss	600 x 450mm	WT600GB	£107.00	£128.40	WT600GB	£107.00	£128.40
Oregon 570 Ceramic Counter-Top Basin	570 x 435mm	UKB-110	£88.00	**£105.60**	UKB-110	£88.00	**£105.60**
Monica 60 with Worktop Combination			**£408.00**	**£489.60**		**£438.00**	**£525.60**

Alternative Basin Options				
Oregon 620 Ceramic Counter-Top Basin	620 x 500mm	UKB-111	£95.00	**£114.00**
Ebony Square Ceramic Counter-Top Basin	545 x 405mm	UKB1050	£98.00	£117.60
Alternative Worktop Options				
Gloss White Finish - *Pre-Drilled Hole For Basin*	600 x 450mm	WT600GW	£99.00	£118.80

Monica 50 & 60 2-Drawer

Available in Wall-Hung and Floorstanding Combinations
Floorstanding option also available in 50 Size

2 YEAR MANUFACTURERS GUARANTEE

Monica 60 2-Drawer Wall-Hung Combination - Gloss White

Monica 60 2-Drawer Floorstanding Base Unit

Genesis Drawer Insert - Suitable for most Genesis 60 Drawer Units

		Gloss White			Textured Grey Walnut*		
Monica 60 2-Drawer Wall-Hung Combination	**Dimensions**	**Ref.**	**Exc. VAT**	**Inc. VAT**	**Ref.**	**Exc. VAT**	**Inc. VAT**
Monica 60 2-Drawer Wall-Hung Base Unit	590 x 450 x 500mm	M60WHW	£392.00	£470.40	M60WHWN	£349.00	£418.80
Monica 60 Resin Basin	600 x 460mm	M60BS	£164.00	£196.80	M60BS	£164.00	£196.80
Monica 60 2-Drawer Wall-Hung Combination			**£556.00**	**£667.20**		**£513.00**	**£615.60**

Monica 50 2-Drawer Floorstanding Combination				
Monica 50 2-Drawer Floorstanding Base Unit	490 x 450 x 800mm	M502DBW	£404.00	£484.80
Monica 50 Resin Basin	500 x 460mm	M50BS	£156.00	£187.20
Monica 50 2-Drawer Floorstanding Combination			**£560.00**	**£672.00**
Monica 60 2-Drawer Floorstanding Combination				
Monica 60 2-Drawer Floorstanding Base Unit	590 x 450 x 800mm	M602DBW	£426.00	£511.20
Monica 60 Resin Basin	600 x 460mm	M60BS	£164.00	£196.80
Monica 60 2-Drawer Floorstanding Combination			**£590.00**	**£708.00**

Also Available

Genesis 60 Drawer Divider

For use with Eton, Gemini, Monica & Zeto Units

Ref: GDRW £45.00 Exc. VAT
£54.00 Inc. VAT

Monica 60 3-Drawer

The Monica 60 3-Drawer is a Floorstanding Combination, available in both Gloss White and Grey Walnut Wood Finishes, with 2 additional ceramic basin options

Monica 60 3-Drawer Floorstanding Combination - Gloss White

Monica 60 3-Drawer Floorstanding Base Unit - Grey Walnut

Porto 60 Ceramic Basin Option

		Gloss White			Textured Grey Walnut*		
Monica 60 3-Drawer Combination	**Dimensions**	**Ref.**	**Exc. VAT**	**Inc. VAT**	**Ref.**	**Exc. VAT**	**Inc. VAT**
Monica 60 3-Drawer Floorstanding Base Unit	590 x 450 x 800mm	M603DBW	£518.00	£621.60	M603DBWN	£461.00	£553.20
Monica 60 Resin Basin	600 x 460mm	M60BS	£164.00	£196.80	M60BS	£164.00	£196.80
Monica 60 3-Drawer Combination			**£682.00**	**£818.40**		**£625.00**	**£750.00**

Also Shown With:				
Duchess Mirror with LED Lights	600 x 700mm	QXM-A13	£202.00	**£242.40**
Alternative Basin Options:				
Porto 60 Ceramic Basin	600 x 460mm	CB5460	£169.00	**£202.80**
Nostalgic 60 Ceramic Basin	610 x 456mm	CB8060C	£109.00	**£130.80**
Arizona 60 Ceramic Basin	610 x 460mm	AR60BAS	£95.00	**£114.00**

**Textured Walnut Finish - While Stocks Last*

Richmond Corner

Complete Corner Combination - including an optional Corner Mirrored Cabinet

Richmond Corner Combination - Gloss White

Richmond Corner Resin Basin Detail

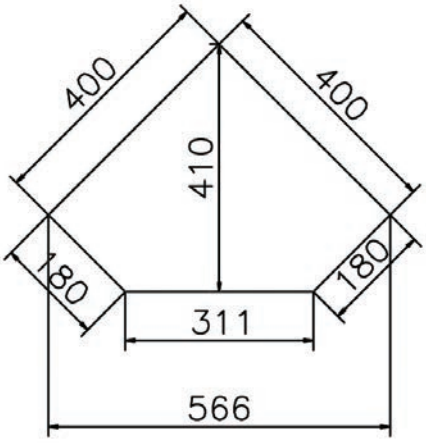

Richmond Corner Combination	Dimensions	Ref. (Gloss White)	Exc. VAT	Inc. VAT
Richmond 1-Door Corner Combination	395 x 395 x 800mm	COR40	£323.00	£387.60
Includes Base Unit & Resin Basin	400x 400mm			
Richmond Corner Combination			**£323.00**	**£387.60**
Also Shown With:				
Richmond Corner Wall Cabinet	323 x 323 x 650mm	CORCB	£168.00	£201.60
Ohio Mini Basin Mono inc. Click-Clack Waste	-	OH06CP	£88.00	**£105.60**

Richmond Combinations

Richmond 45

Richmond 90 WC

Richmond 45 1-Door Combination	Dimensions	Ref. (Gloss White)	Exc. VAT	Inc. VAT
Richmond 40 1-Door Base Unit	420 x 304 x 800mm	R40B	£160.00	£192.00
Richmond 45 Ceramic Basin	455 x 355mm (440 max)	CB450	£52.00	£62.40
Combination Total			**£212.00**	**£254.40**

Richmond 90 WC Combination				
Richmond 40 1-Door Base Unit	420 x 304 x 800mm	R40B	£160.00	£192.00
Richmond 45 Ceramic Basin	455 x 355mm (440 max)	CB450	£52.00	£62.40
Richmond 50 WC Base Unit	500 x 305 x 785mm	R50WCW	£174.00	£208.80
Combination Total			**£386.00**	**£463.20**

Richmond 55 2-Door Combination	Dimensions	Ref. (Gloss White)	Exc. VAT	Inc. VAT	Ref. (Textured Grey Walnut*)	Exc. VAT	Inc. VAT
Richmond 50 2-Door Base Unit	525 x 304 x 800mm	R50BW	£179.00	£214.80	R50BWN	£144.00	£172.80
Richmond 55 Ceramic Basin	550 x 430mm	CB550	£61.00	£73.20	CB550	£61.00	£73.20
Combination Total			**£240.00**	**£288.00**		**£205.00**	**£246.00**

Richmond 130 WC Combination	Dimensions	Ref. (Gloss White)	Exc. VAT	Inc. VAT	Ref. (Textured Grey Walnut*)	Exc. VAT	Inc. VAT
Richmond 50 2-Door Base Unit	525 x 304 x 800mm	R50BW	£179.00	£214.80	R50BWN	£144.00	£172.80
Richmond 55 Ceramic Basin	550 x 430mm	CB550	£61.00	£73.20	CB550	£61.00	£79.20
Richmond 50 WC Base Unit	500 x 305 x 785mm	R50WCW	£174.00	£208.80	R50WCWN	£116.00	£139.20
Richmond 30 4-Drawer Base Unit	300 x 305 x 785mm	R304D	£187.00	£224.40	N/A	-	-
Combination Total			**£601.00**	**£721.20**		**£321.00***	**£385.20***

**Excludes 4-Drawer Base Unit*

Also Shown With:				
Ebony Back-to-Wall Pan Only	-	BH21	£146.00	£175.20
Ebony Standard Seat	-	108051	£24.00	£28.80

Richmond 65 2-Door Combination	Dimensions	Ref. (Gloss White)	Exc. VAT	Inc. VAT	Ref. (Pearl Grey)	Exc. VAT	Inc. VAT
Richmond 60 2-Door Base Unit	620 x 304 x 800mm	R60BW	£204.00	£244.80	R60BPG	£214.00	£256.80
Richmond 65 Ceramic Basin	650 x 446mm	CB650	£78.00	£93.60	CB650	£78.00	£93.60
Combination Total			**£282.00**	**£338.40**		**£292.00**	**£350.40**

**Textured Walnut Finish - While Stocks Last*

Richmond Combinations

Gloss White

Richmond 75 3-Door, 2-Drawer Combination	Dimensions	Ref.	Exc. VAT	Inc. VAT
Richmond 70 3-Door, 2-Drawer Base Unit	721 x 334 x 800mm	R70B	£278.00	£333.60
Richmond 75 Ceramic Basin	755 x 485mm	CB750	£102.00	£122.40
Combination Total			**£380.00**	**£456.00**

Gloss White

Richmond 85 3-Door, 2-Drawer Combination	Dimensions	Ref.	Exc. VAT	Inc. VAT
Richmond 80 3-Door, 2-Drawer Base Unit	820 x 334 x 800mm	R80B	£319.00	£382.80
Richmond 85 Ceramic Basin	855 x 485mm	CB850	£122.00	£146.40
Combination Total			**£441.00**	**£529.20**

Gloss White

Richmond 105 2-Door, 3-Drawer Combination	Dimensions	Ref.	Exc. VAT	Inc. VAT
Richmond 105 2-Door, 3-Drawer Base	1014 x 334 x 800mm	R100B	£372.00	£446.40
Richmond 105 Ceramic Basin	1060 x 485mm	CB1050	£174.00	£208.80
Combination Total			**£546.00**	**£655.20**

Gloss White

Richmond 210 Semi-Modular Combination	Dimensions	Ref.	Exc. VAT	Inc. VAT
Richmond 60 2-Door Base Unit	620 x 304 x 800mm	R60B	£204.00	£244.80
Richmond 65 Ceramic Basin	650 x 446mm	CB650	£78.00	£93.60
Richmond 60 WC Base Unit	600 x 305 x 785mm	R60WC	£192.00	£230.40
Richmond 30 4-Drawer Base Unit	300 x 305 x 785mm	R304D	£187.00	£224.40
Richmond 30 1-Door, 1-Drawer Base Unit	300 x 305 x 785mm	R301D1DR	£195.00	£234.00
Richmond 35 2-Door, 1-Drawer Tall Column	350 x 305 x 1900mm	R30TC	£363.00	£435.60
Richmond 210 Semi-Modular Combination			**£1,219.00**	**£1,462.80**

Richmond 105 & 120 1-Piece Basin

GENESIS

2 YEAR MANUFACTURERS GUARANTEE

Available in Gloss White & Pearl Grey Finishes

Richmond 120 1-Piece Resin Basin Combination in Pearl Grey - Shown Left Hand

		Gloss White		
Richmond 105 1-Piece Basin Combination	**Dimensions**	**Ref.**	**Exc. VAT**	**Inc. VAT**
Richmond 50 2-Door Base Unit	525 x 304 x 800mm	R50BW	£179.00	£214.80
Richmond 105 1-Piece Resin Basin (LH or RH)	1050 x 320mm (445 max)	R1051PB	£368.00	£441.60
Richmond 50 WC Base Unit with no top*	499 x 304 x 800mm	R50WC1PW	£171.00	£205.20
Richmond 105 1-Piece Basin Combination			**£718.00**	**£861.60**

** For use with 1-Piece Basin Only*

		Gloss White			Pearl Grey (PG)		
Richmond 120 1-Piece Basin Combination	**Dimensions**	**Ref.**	**Exc. VAT**	**Inc. VAT**	**Ref.**	**Exc. VAT**	**Inc. VAT**
Richmond 60 2-Door Base Unit	620 x 304 x 800mm	R60BW	£204.00	£244.80	R60BPG	£214.00	£256.80
Richmond 120 1-Piece Resin Basin (LH or RH)	1250 x 320mm (445 max)	R1201PB	£437.00	£524.40	R1201PB	£437.00	£524.40
Richmond 60 WC Base Unit with no top*	599 x 304 x 800mm	R60WC1PW	£180.00	£216.00	R60WC1PPG	£189.00	£226.80
Richmond 120 1-Piece Basin Combination			**£821.00**	**£985.20**		**£840.00**	**£1,008.00**

** For use with 1-Piece Basin Only* **WC Unit DOES NOT Include Cistern**

Genesis Q-Line Modular Furniture

Genesis Q-Line Modular 1800 Standard Depth Combination

2 YEAR MANUFACTURERS GUARANTEE

Genesis Q-Line 1800 Combination - Standard Depth
Matt Moonlight Blue Finish

			Gloss White		Platinum Grey / Matt Moonlight Blue	
Genesis Q-Line 1800 Combination	**Dimensions**	**Ref.**	**Exc. VAT**	**Inc. VAT**	**Exc. VAT**	**Inc. VAT**
Genesis Q-Line 50 Base Unit	498 x 345 x 850mm*	GQ50BU	£202.00	£242.40	£227.00	£272.40
Genesis Q-Line 30 Single Base with Roll Holder	300 x 345 x 850mm*	GQ30TR	£282.00	£338.40	£305.00	£366.00
Genesis Q-Line 50 WC Base Unit	498 x 345 x 850mm*	GQ50WC	£205.00	£246.00	£229.00	£274.80
Genesis Q-Line 50 2-Door, 1-Drawer Base Unit	498 x 345 x 850mm*	GQ50DR	£278.00	£333.60	£302.00	£362.40
Genesis Q-Line 50 Square Resin Basin	500 x 350mm	QXLINE500	£154.00	£184.80	£154.00	£184.80
Genesis Q-Line 1500 Worktop	1500 x 350 x 30mm	GQ150WT	£160.00	£192.00	£173.00	£207.60
Genesis Q-Line 1800 Plinth	1800 x 150 x 18mm	GQ1800PL	£53.00	£63.60	£59.00	£70.80
2 x Genesis Q-Line Plinth Side Returns - Standard Depth	322 x 150 x 18mm	GQ325PL	£22.00	£26.40	£24.00	£28.80
Eden 50 1-Door Mirrored Cabinet	500 x 160 x 600mm	ED50MC	£164.00	£196.80	£193.00	£231.60
Genesis Q-Line 30 Single Wall Unit	300 x 160 x 600mm	GQ30WU	£131.00	£157.20	£147.00	£176.40
2 x Genesis Q-Line 50 Double Wall Units	498 x 160 x 600mm	GQ50WU	£320.00	£384.00	£358.00	£428.00
11 x Genesis Q-Line Handles (Select from p351)	-	GQH	£110.00	£132.00	£110.00	£132.00
Genesis Q-Line 1800 Combination			**£2,081.00** Exc. VAT		**£2,281.00** Exc. VAT	
NOTE: Combination prices DO NOT include, Taps, Back-to-Wall Pans, Concealed Cisterns or Accessories			**£2,497.20** Inc. VAT		**£2,735.60** Inc. VAT	

Genesis Q-Line Modular Furniture

Genesis Q-Line Modular 1800 1-Piece Basin Combination

Genesis Q-Line 1800 1-Piece Round Resin Basin (LH) Combination - Standard Depth - Platinum Grey Finish

1800 1-Piece Resin Basin is also available as a central basin option as pictured above - See p352-353

			Gloss White		Platinum Grey / Matt Moonlight Blue	
Genesis Q-Line 1800 1-Piece Round Basin Combination	**Dimensions**	**Ref.**	**Exc. VAT**	**Inc. VAT**	**Exc. VAT**	**Inc. VAT**
Genesis Q-Line 60 Base Unit	598 x 345 x 850mm*	GQ60BU	£213.00	£255.60	£239.00	£286.80
Genesis Q-Line 60 WC Base Unit	598 x 345 x 850mm*	GQ60WC	£216.00	£259.20	£241.00	£289.20
2 x Genesis Q-Line 30 1-Door, 1-Drawer Base Units	300 x 345 x 850mm*	GQ30DR	£532.00	£638.40	£578.00	£693.60
Genesis Q-Line 1800 1-Piece Round Basin (LH)	1800 x 350mm (450 max)	GQ18RN	£698.00	£837.60	£698.00	£837.60
Genesis Q-Line 1800 Plinth	1800 x 150 x 18mm	GQ1800PL	£53.00	£63.60	£59.00	£70.80
2 x Genesis Q-Line Plinth Side Return - Standard Depth	322 x 150 x 18mm	GQ325PL	£22.00	£26.40	£24.00	£28.80
6 x Genesis Q-Line Handles (Select from p351)	-	GQH	£60.00	£72.00	£60.00	£72.00
Genesis Q-Line 1800 1-Piece Round Basin Combination			**£1,794.00** Exc. VAT		**£1,899.00** Exc. VAT	
NOTE: Combination prices DO NOT include, Taps, Back-to-Wall Pans, Concealed Cisterns or Accessories			**£2,152.80** Inc. VAT		**£2,278.80** Inc. VAT	

 ** Overall Height Including Plinth*

Genesis Q-Line Modular Furniture

Genesis Q-Line Modular 1700 Standard Depth Combination

2 YEAR MANUFACTURERS GUARANTEE

Genesis Q-Line 1700 Worktop Combination
Standard Depth - Gloss White Finish

			Gloss White		Platinum Grey / Matt Moonlight Blue	
Genesis Q-Line 1700 Worktop Combination	**Dimensions**	**Ref.**	**Exc. VAT**	**Inc. VAT**	**Exc. VAT**	**Inc. VAT**
Genesis Q-Line 60 Base Unit	598 x 345 x 850mm*	GQ60BU	£213.00	£255.60	£239.00	£286.80
Genesis Q-Line 60 WC Base Unit	598 x 345 x 850mm*	GQ60WC	£216.00	£259.20	£241.00	£289.20
Genesis Q-Line 20 1-Door Base Unit	200 x 345 x 850mm*	GQ20	£136.00	£163.20	£150.00	£180.00
Genesis Q-Line 30 2-Door, 2 Drawer Tall Column	300 x 345 x 1950mm*	GQ30COL	£538.00	£645.60	£585.00	£702.00
Genesis Q-Line 1500 Worktop - Shown in Gloss White	1500 x 350 x 30mm	GQ150WT	£160.00	£192.00	£173.00	£207.60
Carolina Semi-Recessed Ceramic Basin (1TH)	520 x 420mm	UKB-B505	£76.00	£91.20	£76.00	£91.20
Genesis Q-Line 1800 Plinth	1800 x 150 x 18mm	GQ1800PL	£53.00	£63.60	£59.00	£70.80
2 x Genesis Q-Line Plinth Side Return - Standard Depth	322 x 150 x 18mm	GQ325PL	£22.00	£26.40	£24.00	£28.80
Eden 60 2-Door Mirrored Cabinet	600 x 160 x 600mm	ED60MC	£282.00	£338.40	£316.00	£379.20
8 x Genesis Q-Line Handles (Select from p351)	-	GQH	£80.00	£96.00	£80.00	£96.00
Genesis Q-Line 1700 Worktop Combination			**£1,776.00** Exc. VAT		**£1,943.00** Exc. VAT	
NOTE: Combination prices DO NOT include, Taps, Back-to-Wall Pans, Concealed Cisterns or Accessories			**£2,131.20** Inc. VAT		**£2,331.60** Inc. VAT	

Genesis Q-Line Modular Furniture

Genesis Q-Line Modular 1700 Standard Depth Combination

Genesis Q-Line 1700 Standard Depth Combination - Standard Depth - Gloss White Finish

Combination pictured without plinth to show adjustable legs

Genesis Q-Line 1700 Standard Depth Combination	Dimensions	Ref.	Gloss White Exc. VAT	Gloss White Inc. VAT	Platinum Grey / Matt Moonlight Blue Exc. VAT	Platinum Grey / Matt Moonlight Blue Inc. VAT
Genesis Q-Line 60 Base Unit	598 x 345 x 850mm*	GQ60BU	£213.00	£255.60	£239.00	£286.80
Genesis Q-Line 60 WC Base Unit	598 x 345 x 850mm*	GQ60WC	£216.00	£259.20	£241.00	£289.20
Genesis Q-Line 30 1-Door, 1-Drawer Base Unit	300 x 345 x 850mm*	GQ30DR	£266.00	£319.20	£289.00	£346.80
Genesis Q-Line Filler Panel (Cut to Size)	822 x 345 x 18mm	GQ345FP	£63.00	£75.60	£70.00	£84.00
Genesis Q-Line 1800 Plinth (Cut to Size)	1800 x 150 x 30mm	GQ1800PL	£53.00	£63.60	£59.00	£70.80
2 x Genesis Q-Line 60 Worktops - Shown in Black Sparkle	600 x 350 x 30mm	WT600BS	£220.00	£264.00	£220.00	£264.00
Genesis Q-Line 60 Curved Resin Basin	600 x 350mm (450 max)	QXLINE600C	£250.00	£300.00	£250.00	£300.00
Eden 60 2-Door Mirrored Cabinet	600 x 160 x 600mm	ED60MC	£282.00	£338.40	£316.00	£379.20
Genesis Q-Line 60 2-Door Wall Unit	598 x 160 x 600mm	GQ60WU	£192.00	£230.40	£215.00	£258.00
Genesis Q-Line 30 1-Door Wall Unit	300 x 160 x 600mm	GQ30WU	£131.00	£187.20	£147.00	£176.40
Genesis Q-Line 20 1-Door Wall Unit	200 x 160 x 600mm	GQ20WU	£126.00	£151.20	£141.00	£169.40
8 x Genesis Q-Line Handles (Select from p351)	-	GQH	£80.00	£96.00	£80.00	£96.00
Genesis Q-Line 1700 Standard Depth Combination			**£2,092.00** Exc. VAT		**£2,267.00** Exc. VAT	
NOTE: Combination prices DO NOT include, Taps, Back-to-Wall Pans, Concealed Cisterns or Accessories			**£2,590.40** Inc. VAT		**£2,720.60** Inc. VAT	

 ** Overall Height Including Plinth*

Genesis Q-Line Modular Furniture

Genesis Q-Line Modular 1500 Square 1-Piece Basin Combination

2 YEAR MANUFACTURERS GUARANTEE

1500 1-Piece Resin Basin is also available as a Round option - See p352-353

1500 1-Piece Square Basin Combination
Basin Pictured Left Hand
Standard Depth - Platinum Grey Finish

Finish Options

Gloss White

Platinum Grey

Matt Moonlight Blue

Genesis Q-Line 1500 1-Piece Square Basin Combination	Dimensions	Ref.	Gloss White Exc. VAT	Gloss White Inc. VAT	Platinum Grey / Matt Moonlight Blue Exc. VAT	Platinum Grey / Matt Moonlight Blue Inc. VAT
Genesis Q-Line 60 Base Unit	598 x 345 x 850mm*	GQ60BU	£213.00	£255.60	£239.00	£286.80
Genesis Q-Line 60 WC Base Unit	598 x 345 x 850mm*	GQ60WC	£216.00	£259.20	£241.00	£289.20
Genesis Q-Line 30 1-Door, 1-Drawer Base Unit	300 x 345 x 850mm*	GQ30DR	£266.00	£319.20	£289.00	£346.80
Genesis Q-Line 1500 1-Piece Square Basin (LH or RH)	1500 x 350mm (420 max)	GQ150SQ	£655.00	£786.00	£655.00	£786.00
Genesis Q-Line 1800 Plinth (Cut to Size)	1800 x 150 x 18mm	GQ1800PL	£53.00	£63.60	£59.00	£70.80
2 x Genesis Q-Line Plinth Side Return - Standard Depth	322 x 150 x 18mm	GQ325PL	£22.00	£26.40	£24.00	£28.80
Eden 60 2-Door Mirrored Cabinet	600 x 160 x 600mm	ED60MC	£282.00	£338.40	£316.00	£379.20
4 x Genesis Q-Line Handles (Select from p351)	-	GQH	£40.00	£48.00	£40.00	£48.00
Genesis Q-Line 1500 1-Piece Square Basin Combination			£1,747.00 Exc. VAT		£1,863.00 Exc. VAT	
NOTE: Combination prices DO NOT include, Taps, Back-to-Wall Pans, Concealed Cisterns or Accessories			£2,096.40 Inc. VAT		£2,235.60 Inc. VAT	

Genesis Q-Line Modular Furniture

Genesis Q-Line Modular 1200 Square 1-Piece Basin Combination

Genesis Q-Line 1200 1-Piece Square Basin Combination
Basin Pictured Left Hand
Standard Depth - Gloss White Finish

			Gloss White		Platinum Grey / Matt Moonlight Blue	
Genesis Q-Line 1200 1-Piece Square Basin Combination	**Dimensions**	**Ref.**	**Exc. VAT**	**Inc. VAT**	**Exc. VAT**	**Inc. VAT**
Genesis Q-Line 60 Base Unit	598 x 345 x 850mm*	GQ60BU	£213.00	£255.60	£239.00	£286.80
Genesis Q-Line 60 Slim WC Base Unit	598 x 245 x 850mm*	GQ60WCSL	£205.00	£246.00	£229.00	£274.80
Genesis Q-Line 1200 1-Piece Square Basin (LH or RH)	1200 x 250mm (350 max)	GQ1200SQ	£402.00	£482.40	£402.00	£482.40
2 x Genesis Q-Line 600 Plinths	598 x 150 x 18mm	GQ600PL	£44.00	£52.80	£50.00	£60.00
Genesis Q-Line Plinth Side Return - Standard Depth	322 x 150 x 18mm	GQ325PL	£11.00	£13.20	£12.00	£14.40
2 x Genesis Q-Line Plinth Side Returns - Slimline	222 x 150 x 18mm	GQ225PL	£16.00	£19.20	£18.00	£21.60
2 x Genesis Q-Line Handles (Select from p351)	-	GQH	£20.00	£24.00	£20.00	£24.00
Genesis Q-Line 1200 1-Piece Square Basin Combination			**£911.00** Exc. VAT		**£970.00** Exc. VAT	
NOTE: Combination prices DO NOT include, Taps, Back-to-Wall Pans, Concealed Cisterns or Accessories			**£1,093.20** Inc. VAT		**£1,164.00** Inc. VAT	

This combination is also available in 1000mm

 ** Overall Height Including Plinth*

Genesis Q-Line Modular Furniture

Genesis Q-Line Modular 1000 & 1200 Slimline Combinations

Genesis Q-Line 1200 Slimline Combination - Matt Moonlight Blue Finish

Genesis Q-Line 1000 Slimline Combination - Matt Moonlight Blue Finish

			Gloss White		Matt Moonlight Blue	
Genesis Q-Line 1200 Slimline Combination	**Dimensions**	**Ref.**	**Exc. VAT**	**Inc. VAT**	**Exc. VAT**	**Inc. VAT**
Genesis Q-Line 50 Slim Base Unit	498 x 245 x 850mm*	GQ50BUSL	£192.00	£230.40	£214.00	£256.80
Genesis Q-Line 50 Slim WC Base Unit	498 x 245 x 850mm*	GQ50WCSL	£194.00	£232.80	£217.00	£260.40
Genesis Q-Line 20 Slim Base Unit with Roll Holder	200 x 245 x 850mm*	GQ20SL	£266.00	£319.20	£287.00	£344.40
Genesis Q-Line 1500 Slim Worktop (Cut to Size)	1500 x 250 x 30mm	GQ1500SLWT	£116.00	£139.20	£124.00	£148.80
Genesis Q-Line 50 Slim Square Resin Basin	500 x 250mm (344 max)	QXLINESL50	£138.00	£165.60	£138.00	£165.60
Genesis Q-Line 1800 Plinth (Cut to Size)	1800 x 150 x 18mm	GQ1800PL	£53.00	£63.60	£59.00	£70.80
2 x Genesis Q-Line Plinth Side Return - Slimline	222 x 150 x 18mm	GQ225PL	£16.00	£19.20	£18.00	£21.60
3 x Genesis Q-Line Handles (Select from p351)	-	GQH	£30.00	£36.00	£30.00	£36.00
Genesis Q-Line 1200 Slimline Combination Total			**£1,005.00** Exc. VAT		**£1,087.00** Exc. VAT	
NOTE: Combination prices DO NOT include, Taps, Back-to-Wall Pans, Concealed Cisterns or Accessories			**£1,206.00** Inc. VAT		**£1,304.40** Inc. VAT	

Genesis Q-Line 1000 Slimline Combination	**Dimensions**	**Ref.**	**Exc. VAT**	**Inc. VAT**	**Exc. VAT**	**Inc. VAT**
Genesis Q-Line 50 Slim Base Unit	498 x 245 x 850mm*	GQ50BUSL	£192.00	£230.40	£214.00	£256.80
Genesis Q-Line 50 Slim WC Base Unit	498 x 245 x 850mm*	GQ50WCSL	£194.00	£232.80	£217.00	£260.40
Genesis Q-Line 600 Slim Worktop (Cut to Size)	600 x 250 x 30mm	GQ600SLWT	£50.00	£60.00	£50.00	£60.00
Genesis Q-Line 50 Slim Square Resin Basin	500 x 250mm (344 max)	QXLINESL50	£138.00	£165.60	£138.00	£165.60
Genesis Q-Line 1000 Plinth	1000 x 150 x 18mm	GQ1000PL	£29.00	£34.80	£33.00	£39.60
2 x Genesis Q-Line Plinth Side Return - Slimline	222 x 150 x 18mm	GQ225PL	£16.00	£19.20	£18.00	£21.60
2 x Genesis Q-Line Handles (Select from p351)	-	GQH	£20.00	£24.00	£20.00	£24.00
Genesis Q-Line 1000 Slimline Combination Total			**£639.00** Exc. VAT		**£690.00** Exc. VAT	
NOTE: Combination prices DO NOT include, Taps, Back-to-Wall Pans, Concealed Cisterns or Accessories			**£766.80** Inc. VAT		**£828.00** Inc. VAT	

Slimline Base Units are not available in Platinum Grey

Genesis Q-Line Base Units

2 YEAR MANUFACTURERS GUARANTEE

GENESIS Q-LINE Modular Furniture

Unit Prices On This Page **Include** Your Choice of Q-Line Handle - Excludes Ritz Handle Options

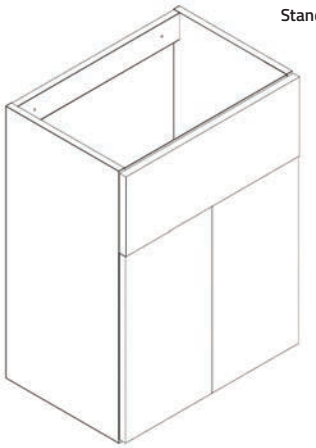

Standard Depth

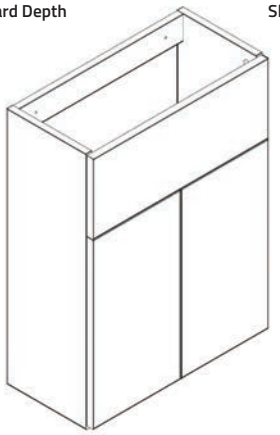

Slimline

50 & 60 Basin Base Units

Ref.	Dimensions	Gloss White Exc. VAT	Gloss White Inc. VAT	Platinum Grey / Matt Moonlight Blue Exc. VAT	Platinum Grey / Matt Moonlight Blue Inc. VAT
GQ50BU	498 x 345 x 850mm*	£222.00	£266.40	£247.00	£318.00
GQ60BU	598 x 345 x 850mm*	£233.00	£279.60	£259.00	£333.60
GQ50BUSL	498 x 245 x 850mm*	£212.00	£254.40	£234.00	£302.40
GQ60BUSL	598 x 245 x 850mm*	£222.00	£266.40	£247.00	£296.40

NOTE: Slimline Base Units are not available in Platinum Grey

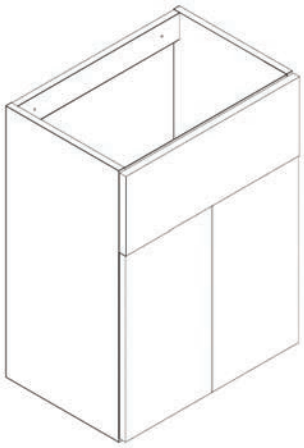

50 2-Door, 1-Drawer Base Unit

Ref.	Dimensions	Gloss White Exc. VAT	Gloss White Inc. VAT	Platinum Grey / Matt Moonlight Blue Exc. VAT	Platinum Grey / Matt Moonlight Blue Inc. VAT
GQ50DR	498 x 345 x 850mm*	£308.00	£369.60	£332.00	£398.40

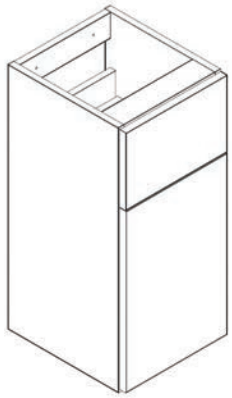

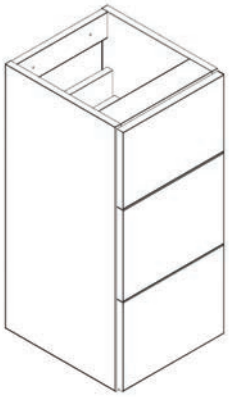

30 1-Door, 1-Drawer & 3-Drawer Base Units

Ref.	Dimensions	Gloss White Exc. VAT	Gloss White Inc. VAT	Platinum Grey / Matt Moonlight Blue Exc. VAT	Platinum Grey / Matt Moonlight Blue Inc. VAT
GQ30DR	300 x 345 x 850mm*	£286.00	£343.20	£309.00	£370.80
GQ303D	300 x 345 x 850mm*	£454.00	£544.80	£478.00	£573.60

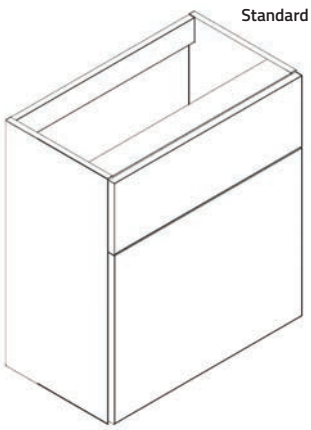

Standard Depth

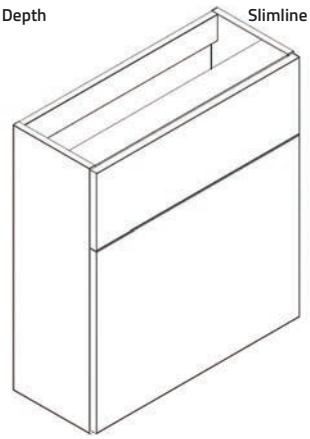

Slimline

50 & 60 WC Base Units

Ref.	Dimensions	Gloss White Exc. VAT	Gloss White Inc. VAT	Platinum Grey / Matt Moonlight Blue Exc. VAT	Platinum Grey / Matt Moonlight Blue Inc. VAT
GQ50WC	498 x 345 x 850mm*	£205.00	£246.00	£229.00	£274.80
GQ60WC	598 x 345 x 850mm*	£213.00	£255.60	£241.00	£289.20
GQ50WCSL	498 x 245 x 850mm*	£194.00	£232.80	£217.00	£260.40
GQ60WCSL	598 x 245 x 850mm*	£205.00	£246.00	£229.00	£274.80

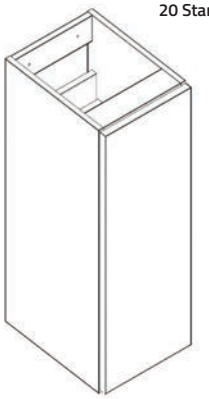

20 Standard

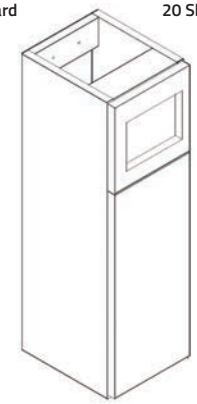

20 Slimline

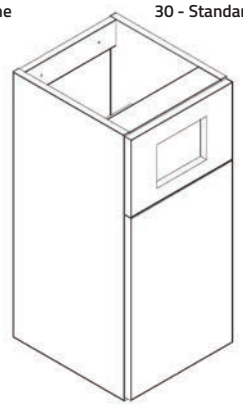

30 - Standard

20 & 30 Single Base & 20 Unit with Roll Holder

Ref.	Dimensions	Gloss White Exc. VAT	Gloss White Inc. VAT	Platinum Grey / Matt Moonlight Blue Exc. VAT	Platinum Grey / Matt Moonlight Blue Inc. VAT
GQ20	200 x345 x 850mm*	£146.00	£175.20	£160.00	£192.00
GQ20SL	200 x245 x 850mm*	£276.00	£331.20	£297.00	£356.40
GQ30TR	300 x 345 x 850mm*	£292.00	£350.40	£315.00	£378.00

NOTE: 20 Slimline Base Unit is not available in Platinum Grey

30 Tall Column

Ref.	Dimensions	Gloss White Exc. VAT	Gloss White Inc. VAT	Platinum Grey / Matt Moonlight Blue Exc. VAT	Platinum Grey / Matt Moonlight Blue Inc. VAT
GQ30COL	300 x 345 x 1950mm*	£578.00	£693.60	£625.00	£750.00

 ** Overall Height Including Plinth*

Genesis Q-Line Wall Units

2 YEAR MANUFACTURERS GUARANTEE

Unit Prices On This Page **Include** Your Choice of Q-Line Handle - Excludes Ritz Handle Options

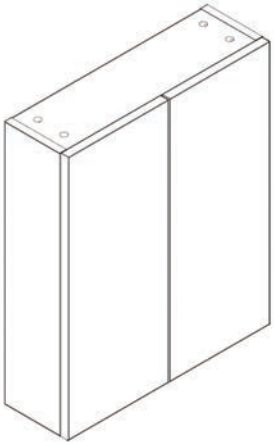

50 & 60 Double Wall Cabinets

Ref.	Dimensions	Gloss White Exc. VAT	Gloss White Inc. VAT	Platinum Grey / Matt Moonlight Blue Exc. VAT	Platinum Grey / Matt Moonlight Blue Inc. VAT
GQ50WU	498 x 160 x 600mm	£180.00	£216.00	£199.00	£238.80
GQ60WU	598 x 160 x 600mm	£212.00	£254.40	£235.00	£282.00

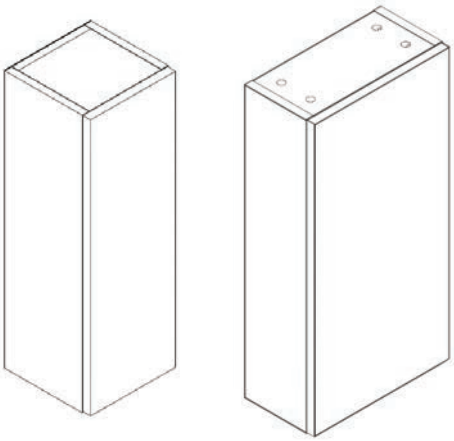

20 & 30 Single Wall Cabinets

Ref.	Dimensions	Gloss White Exc. VAT	Gloss White Inc. VAT	Platinum Grey / Matt Moonlight Blue Exc. VAT	Platinum Grey / Matt Moonlight Blue Inc. VAT
GQ20WU	200 x 160 x 600mm	£136.00	£163.20	£151.00	£181.20
GQ30WU	300 x 160 x 600mm	£141.00	£169.20	£157.00	£188.40

50 1-Door Cabinet

60 2-Door Cabinet

Eden 50 & 60 Mirrored Cabinets

Ref.	Dimensions	Gloss White Exc. VAT	Gloss White Inc. VAT	Platinum Grey / Matt Moonlight Blue Exc. VAT	Platinum Grey / Matt Moonlight Blue Inc. VAT
ED50MC	500 x 160 x 600mm	£164.00	£196.80	£203.00	£243.60
ED60MC	600 x 160 x 600mm	£282.00	£338.40	£316.00	£379.20

Handle Options

£10.00 Exc. VAT **£12.00 Inc. VAT**

Bow Handle
Finish: Chrome
Ref: GQH570

Curved Bar Handle
Finish: Chrome
Ref: GQH004

Curved Slim Handle
Finish: Chrome
Ref: GQH456

Long Bow Handle
Finish: Chrome
Ref: GQH110

Round Brushed Handle
Finish: Brushed Chrome
Ref: GQH525

Q-Line Round Handle
Finish: Brushed Chrome
Ref: QHLE83

Slim D Handle
Finish: Chrome
Ref: GQH603
Finish: Matt Black
Ref: GQH603BL
Finish: Brushed Brass
Ref: GQH603BB

Brushed Brass

Matt Black

The Q-Line Furniture is also compatible with the Ritz Furniture Handles detailed on p358
(Additional costs apply - Knobs are not compatible)

Genesis Q-Line Basin Options

A Comprehensive Range of 1-Piece, Square, Curved & Semi-Recessed Basins

Genesis Q-Line **1000 & 1200mm** 1-Piece Square Basins
Shown Left Hand

Genesis Q-Line **1500mm** 1-Piece Square Basin
Shown Right Hand

Description	Dimensions	Ref.	Exc. VAT	Inc. VAT
1000 Square 1-Piece Resin Basin - Left Hand or Right Hand	1000 x 250mm (350 max)	GQ100SQ	£360.00	£432.00
1200 Square 1-Piece Resin Basin - Left Hand or Right Hand	1200 x 250mm (350 max)	GQ120SQ	£402.00	£482.40
1500 Square 1-Piece Resin Basin - Left Hand or Right Hand	1500 x 350mm (420 max)	GQ150SQ	£655.00	£786.00

Genesis Q-Line 1500 & 1800mm 1-Piece Round Basin
Shown Left Hand

Genesis Q-Line 1800mm 1-Piece Round Centre Basin

Description	Dimensions	Ref.	Exc. VAT	Inc. VAT
1500 Round 1-Piece Resin Basin - Left Hand or Right Hand	1500 x 350mm (450 max)	GQ150RN	£592.00	£710.40
1800 Round 1-Piece Resin Basin - Left Hand or Right Hand	1800 x 350mm (450 max)	GQ18RN	£698.00	£837.60
1800 Round 1-Piece Centre Resin Basin	1800 x 350mm (450 max)	GQ18RMID	£698.00	£837.60

Genesis Q-Line Basin Options

A Comprehensive Range of 1-Piece, Square, Curved & Semi-Recessed Basins

2 YEAR MANUFACTURERS GUARANTEE

Serene 1-Piece Resin Basin
Shown Left Hand

Serene 1-Piece Resin Basin

Dimensions	Ref.	Exc. VAT	Inc. VAT
1000 x 350mm (470 max) *Left or Right Hand*	S100BAS	£362.00	**£434.00**
1200 x 350mm (470 max) *Left or Right Hand*	S120BAS	£428.00	**£513.60**

Stamford 1-Piece Resin Basin
Shown Left Hand

Stamford 1-Piece Resin Basin *Shown Left Hand*

Dimensions	Ref.	Exc. VAT	Inc. VAT
1000 x 350mm (400 max) *Left or Right Hand*	STA100BS	£340.00	**£408.00**
1200 x 350mm (400 max) *Left or Right Hand*	STA120BS	£402.00	**£482.40**

Q-Line 50 Square Slimline Basin
Ref: QXLINESL50
Dimensions: 500 x 250mm
£138.00 Exc. VAT **£165.60 Inc. VAT**

Q-Line 50 Square Basin
Ref: QXLINE500
Dimensions: 500 x 350mm
£154.00 Exc. VAT **£184.80 Inc. VAT**

Q-Line 50 Curved Slimline Basin
Ref: QXLINESL50C
Dimensions: 500 x 250mm (350 max)
£188.00 Exc. VAT **£225.60 Inc. VAT**

Q-Line 50 Curved Basin
Ref: QXLINE500C
Dimensions: 500 x 350mm (450 max)
£204.00 Exc. VAT **£244.80 Inc. VAT**

Q-Line 60 Square Slimline Basin
Ref: QXLINESL60
Dimensions: 600 x 250mm
£164.00 Exc. VAT **£196.80 Inc. VAT**

Q-Line 60 Square Basin
Ref: QXLINE600
Dimensions: 600 x 350mm
£175.00 Exc. VAT **£210.00 Inc. VAT**

Q-Line 60 Curved Slimline Basin
Ref: QXLINESL60C
Dimensions: 600 x 250mm (350 max)
£227.00 Exc. VAT **£272.40 Inc. VAT**

Q-Line 60 Curved Basin
Ref: QXLINE600C
Dimensions: 600 x 350mm (450 max)
£250.00 Exc. VAT **£300.00 Inc. VAT**

Genesis Q-Line Worktops

A range of Worktop, Plinth & Panel Options

Gloss White	Platinum Grey	Matt Moonlight Blue

Matching Laminate Worktops

Description	Dimensions	Ref.	Gloss White Exc. VAT	Gloss White Inc. VAT	Platinum Grey / Matt Moonlight Blue Exc. VAT	Platinum Grey / Matt Moonlight Blue Inc. VAT
Q-Line 600 Worktop - Standard 350mm Depth	600 x 350 x 30mm	GQ600WT	£67.00	£80.40	£70.00	£84.00
Q-Line 600 Slim Worktop - Slimline 250mm Depth	600 x 250 x 30mm	GQ600SLWT	£50.00	£60.00	£50.00	£60.00
Q-Line 1500 Worktop - Standard 350mm Depth	1500 x 350 x 30mm	GQ150WT	£160.00	£192.00	£173.00	£207.60
Q-Line 1500 Slim Worktop - Slimline 250mm Depth	1500 x 250 x 30mm	GQ150SLWT	£116.00	£139.20	£124.00	£148.80
Q-Line 2400 Worktop - Standard 350mm Depth	2400 x 350 x 30mm	GQ240WT	£252.00	£302.40	£277.00	£332.40

Limestone Laminate	Black Sparkle Laminate	Taurus Sand Laminate	Star Black Laminate	Cappuccino Solid Surface
Whilst Stocks Last	*Whilst Stocks Last*	*Whilst Stocks Last*	*Whilst Stocks Last*	*Whilst Stocks Last*

Laminate & Solid Surface Worktops

Description	Dimensions	Ref.	Limestone / Black Sparkle Exc. VAT	Limestone / Black Sparkle Inc. VAT	Star Black / Taurus Sand Exc. VAT	Star Black / Taurus Sand Inc. VAT	Cappuccino Exc. VAT	Cappuccino Inc. VAT
Q-Line 600 Worktop - Standard 350mm Depth	600 x 350 x 28mm	QWT600	£110.00	£132.00	£52.00	£62.40	£141.00	£169.20
Q-Line 600 Slim Worktop - Slimline 250mm Depth	600 x 250 x 28mm	QWT600SL	£101.00	£121.20	£50.00	£60.00	£134.00	£169.20
Q-Line 1200 Worktop - Standard 350mm Depth	1200 x 350 x 28mm	QWT1200	£148.00	£177.60	-	-	-	-
Q-Line 1200 Slim Worktop - Slimline 250mm Depth	1200 x 250 x 28mm	QWT1200SL	£139.00	£166.80	-	-	-	-
Q-Line 2400 Worktop - Standard 350mm Depth	2400 x 350 x 28mm	QWT2400	£269.00	£322.80	-	-	-	-

Plinth & Filler Panel Options

Description	Dimensions	Ref.	Gloss White Exc. VAT	Gloss White Inc. VAT	Platinum Grey / Matt Moonlight Blue Exc. VAT	Platinum Grey / Matt Moonlight Blue Inc. VAT
Q-Line 600 Plinth	600 x 150 x 18mm	GQ600PL	£22.00	£26.40	£25.00	£30.00
Q-Line 1000 Plinth	1000 x 150 x 18mm	GQ1000PL	£29.00	£34.80	£33.00	£39.60
Q-Line 1800 Plinth	1800 x 150 x 18mm	GQ1800PL	£53.00	£63.60	£59.00	£70.80
Q-Line 2400 Plinth	2400 x 150 x 18mm	GQ2400PL	£70.00	£84.00	£78.00	£93.60
Plinth Return Panel - Standard 350mm Depth	322 x 150 x 18mm	GQ325PL	£11.00	£13.20	£12.00	£14.40
Plinth Return Panel - Slimline 250mm Depth	222 x 150 x 18mm	GQ225PL	£8.00	£9.60	£9.00	£10.80
Q-Line Filler Panel	822 x 345 x 18mm	GQ345FP	£63.00	£75.60	£70.00	£84.00

Bath Panels

- MDF Wooden Panels
- 2 Colour Finishes
- Panel Height: Adjustable 400-580mm
- 2-Piece Panel

Front Panels	Ref.	Matt Moonlight Blue Exc. VAT	Matt Moonlight Blue Inc. VAT	Platinum Grey Exc. VAT	Platinum Grey Inc. VAT
1700mm	GQ1700BP	£229.00	£274.80	£229.00	£274.80

End Panels	Ref.	Exc. VAT	Inc. VAT	Exc. VAT	Inc. VAT
700mm	GQ700BP	£95.00	£114.00	£95.00	£114.00
750mm	GQ750BP	£101.00	£121.20	N/A	N/A
800mm	GQ800BP	£108.00	£129.60	£108.00	£129.60

Ritz 1000

Ritz Modular Furniture is available in Standard **335mm Depth** with Slimline **235mm Depth** WC Base Unit Options

Ritz 1000 1-Piece Square Basin Combination
Basin Pictured Left Hand
Graphite Finish

Handle Options:

Chrome Knob

Bar Handle in Chrome or Satin

The Ritz Furniture is also compatible with the Q-Line Furniture Handles detailed on p351 and the Rimini Handles on p265

Cashmere
Graphite

Ritz 1000 1-Piece Square Basin Combination	Dimensions	Ref.	Exc. VAT	Inc. VAT
Ritz 50 Base Unit - Standard Depth	498 x 335 x 870mm*	RZ50BU	£293.00	**£351.60**
Ritz 50 Slimline WC Base Unit	498 x 235 x 870mm*	RZ50WCSL	£256.00	**£307.20**
Genesis Q-Line 1000 1-Piece Square Resin Basin (LH or RH)	1000 x 250mm (350 max)	GQ1000SQ	£360.00	**£432.00**
2 x Ritz 600 Plinths	600 x 150 x 18mm	RZ600PL	£96.00	**£115.20**
Ritz 320 Plinth Side Return - Standard Depth	322 x 150 x 18mm	RZ325PL	£29.00	**£34.80**
2 x Ritz 220 Plinth Side Returns - Slimline	222 x 150 x 18mm	RZ225PL	£58.00	**£69.60**
Ritz 50 2-Door Wall Unit	500 x 162 x 720mm	RZ50WU	£199.00	**£238.80**
Ritz 50 Mirrored Cabinet	500 x 162 x 720mm	RZ50MC	£350.00	**£420.00**
4 x Ritz Bar Handles - Chrome (alternative handles on p358)	-	RZBOWC	£52.00	**£62.40**
Ritz 1000 1-Piece Square Basin Combination			**£1,693.00**	**£2,031.60**

Also Shown With:

Grosvenor Back-to-Wall Pan	520mm Projection	GR-W212	£191.00	**£229.20**
Nostalgic Wooden Soft Close Seat - Graphite	-	NOS-SEAT	£135.00	**£162.00**

** Overall Height Including Plinth*

Ritz 1200

Ritz Furniture can be used with the Q-Line 1-Piece Basins or with the Q-Line Worktop Options for complete flexibility

Ritz 1200 Worktop Combination
Cashmere Finish

Ritz Column Option

The Ritz Furniture is also compatible with the Q-Line Furniture Handles detailed on p351 and the Rimini Handles on p265

Cashmere
Graphite

Ritz 1200 Worktop Combination	Dimensions	Ref.	Exc. VAT	Inc. VAT
Ritz 60 Base Unit - Standard Depth	598 x 335 x 870mm*	RZ60BU	£308.00	**£369.60**
Ritz 60 WC Base Unit - Standard Depth	598 x 335 x 870mm*	RZ60WC	£270.00	**£324.00**
Q-Line White Gloss 1500 Worktop - Standard Depth - *Cut to Size*	1500 x 350 x 28mm	QWT1500TS	£160.00	**£192.00**
Grosvenor Semi-Recessed Basin - 2TH	545 x 440mm	GR-B212M-2	£161.00	**£193.20**
1 x Ritz 1800 Plinth - *Cut to Size*	1800 x 150 x 18mm	RZ1800PL	£71.00	**£85.20**
2 x Ritz 320 Plinth Side Return - Standard Depth	322 x 150 x 18mm	RZ325PL	£58.00	**£69.60**
Ritz 60 2-Door Wall Unit	600 x 162 x 720mm	RZ60WU	£317.00	**£380.40**
Ritz 60 Mirrored Cabinet	600 x 162 x 720mm	RZ60MC	£350.00	**£420.00**
4 x Ritz Bar Handles - Satin (alternative handles on p358)	-	RZBOWS	£52.00	**£62.40**
Ritz 1200 Worktop Combination			**£1,747.00**	**£2,096.40**
Also Shown With:				
Grosvenor Back-to-Wall Pan	520mm Projection	GR-W212	£191.00	**£229.20**
Nostalgic Wooden Soft Close Seat - Gloss White	-	NOS-SEAT	£135.00	**£162.00**
Ritz 30 Tall Column	300 x 345 x 1990mm*	RZ30COL	£407.00	**£488.40**

** Overall Height Including Plinth*

Ritz 1500

Available in 2 Colour Options - Ash Grain Graphite & Ash Grain Cashmere

2 YEAR MANUFACTURERS GUARANTEE

Ritz 1500 1-Piece Square Basin Combination
Basin Pictured Left Hand
Graphite Finish

Finish Options:

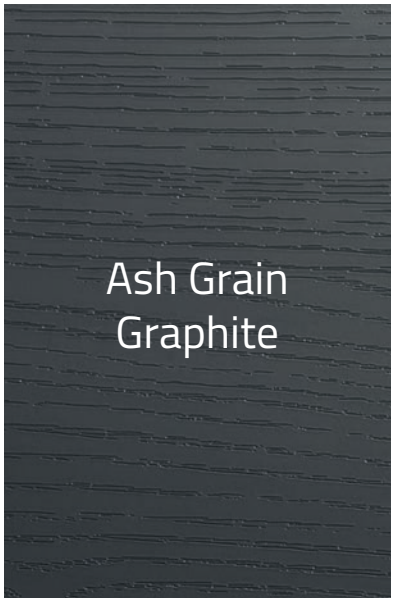

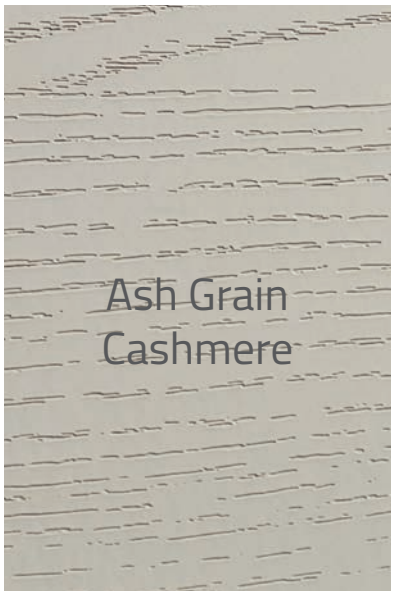

The Ritz Furniture is also compatible with the Q-Line Furniture Handles detailed on p351 and the Rimini Handles on p265

Ritz 1500 1-Piece Square Basin Combination	Dimensions	Ref.	Cashmere Exc. VAT	Cashmere Inc. VAT	Graphite Exc. VAT	Graphite Inc. VAT
Ritz 60 Base Unit - Standard Depth	598 x 335 x 870mm*	RZ60BU	£308.00	**£369.60**		
Ritz 60 WC Base Unit - Standard Depth	598 x 335 x 870mm*	RZ60WC	£270.00	**£324.00**		
Ritz 30 1-Door, 1-Drawer Base Unit - Standard Depth	300 x 335 x 870mm*	RZ30D	£355.00	**£426.00**		
Genesis Q-Line 1500 1-Piece Square Resin Basin (LH or RH)	1500 x 350mm (420 max)	GQ150SQ	£655.00	£786.00		
1 x Ritz 1800 Plinth - *Cut to Size*	1800 x 150 x 18mm	RZ1800PL	£71.00	**£85.20**		
2 x Ritz 320 Plinth Side Return - Standard Depth	322 x 150 x 18mm	RZ325PL	£58.00	**£69.60**		
Ritz 60 2-Door Wall Unit	600 x 162 x 720mm	RZ60WU	£317.00	**£380.40**		
Ritz 30 1-Door Wall Unit	300 x 162 x 720mm	RZ30WU	£199.00	**£238.80**		
Ritz 60 Mirrored Cabinet	600 x 162 x 720mm	RZ60MC	£350.00	**£420.00**		
7 x Ritz Knobs - Chrome (alternative handles on p358)	-	RZKNB	£70.00	**£84.00**		
Ritz 1500 1-Piece Square Basin Combination			**£2,653.00**	**£3,183.60**		
Also Shown With:						
Monza Back-to-Wall Pan & Soft Close Seat	545mm Projection	MON-126B3	£319.00	**£382.80**		

** Overall Height Including Plinth*

Ritz Components

2 YEAR MANUFACTURERS GUARANTEE

ascent Q-LINE

Unit Prices On This Page **Exclude** Your Choice of Handle

Base Units

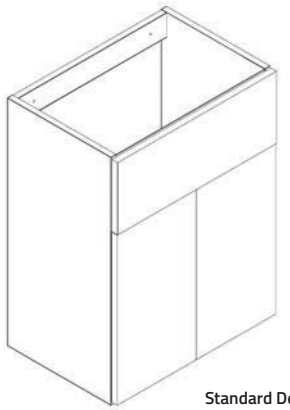

Standard Depth

50 & 60 Basin Base Units - Standard

Ref.	Dimensions	Cashmere / Graphite Exc. VAT	Inc. VAT
RZ50BU	498 x 335 x 870mm*	£293.00	**£351.60**
RZ60BU	598 x 335 x 870mm*	£308.00	**£369.60**

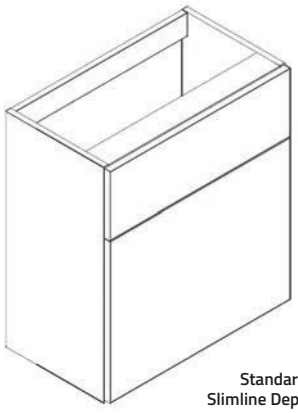

Standard & Slimline Depths

50 & 60 WC Units Standard & Slim

Ref.	Dimensions	Cashmere / Graphite Exc. VAT	Inc. VAT
RZ50WC	498 x 335 x 870mm*	£256.00	**£307.20**
RZ60WC	598 x 335 x 870mm*	£270.00	**£324.00**
RZ50WCSL	498 x 235 x 870mm*	£256.00	**£307.20**
RZ60WCSL	598 x 235 x 870mm*	£256.00	**£307.20**

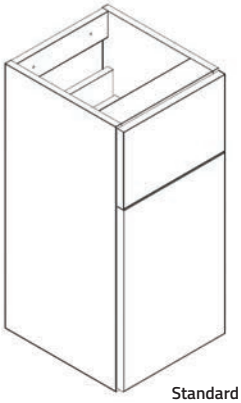

Standard Depth

30 1-Door, 1-Drawer Base Unit

Ref.	Dimensions	Cashmere / Graphite Exc. VAT	Inc. VAT
RZ30D	300 x 335 x 870mm*	£355.00	**£426.00**

30 Tall Column

Ref.	Dimensions	Exc. VAT	Inc. VAT
RZ30COL	300 x 335 x 1990mm*	£407.00	**£488.40**

Wall Units

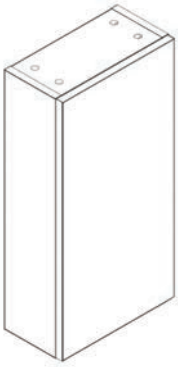

30 1-Door Wall Unit

Ref.	Dimensions	Cashmere / Graphite Exc. VAT	Inc. VAT
RZ30WU	300 x 162 x 720mm	£199.00	**£238.80**

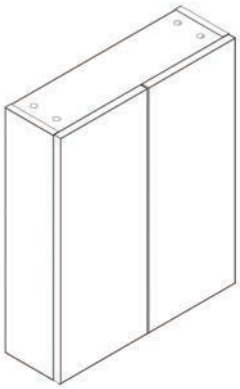

50 & 60 2-Door Wall Units

Ref.	Dimensions	Cashmere / Graphite Exc. VAT	Inc. VAT
RZ50WU	500 x 162 x 720mm	£199.00	**£238.80**
RZ60WU	600 x 162 x 720mm	£317.00	**£380.40**

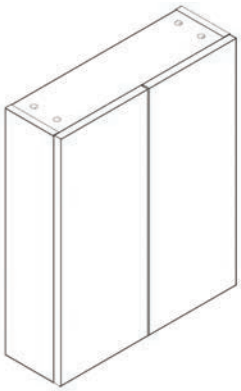

50 & 60 2-Door Mirrored Cabinets

Ref.	Dimensions	Cashmere / Graphite Exc. VAT	Inc. VAT
RZ50MC	500 x 162 x 720mm	£350.00	**£420.00**
RZ60MC	600 x 162 x 720mm	£350.00	**£420.00**

Plinth Options

Description	Dimensions	Ref.	Cashmere / Graphite Exc. VAT	Inc. VAT
Ritz 600 Plinth	600 x 150 x 18mm	RZ600PL	£48.00	**£57.60**
Ritz 1000 Plinth	1000 x 150 x 18mm	RZ1000PL	£57.00	**£68.40**
Ritz 1800 Plinth	1800 x 150 x 18mm	RZ1800PL	£71.00	**£85.20**
Ritz 2400 Plinth	2400 x 150 x 18mm	RZ2400PL	£76.00	**£91.20**
Plinth Return Panel - Standard 350mm Depth	322 x 150 x 18mm	RZ325PL	£29.00	**£34.80**
Plinth Return Panel - Slimline 250mm Depth	222 x 150 x 18mm	RZ225PL	£29.00	**£34.80**

Handle Options - Each

Satin Bar Handle
Finish: Satin
Ref: RZBOWS
£13.00 Exc. VAT
£15.60 Inc. VAT

Chrome Bar Handle
Finish: Chrome
Ref: RZBOWC
£13.00 Exc. VAT
£15.60 Inc. VAT

Single Chrome Knob
Finish: Chrome
Ref: RZKNB
£10.00 Exc. VAT
£12.00 Inc. VAT

The Ritz Furniture is compatible with all Q-Line Worktop Options detailed on p354

The Ritz Furniture is also compatible with the Q-Line Furniture Handles detailed on p351 and the Rimini Handles on p265

** Overall Height Including Plinth*

Standard Mirrored Cabinets

2 YEAR MANUFACTURERS GUARANTEE

Options 40
1-Door Mirrored Cabinet

Options 80
2-Door Mirrored Cabinet

Options 120
3-Door Mirrored Cabinet

Options Mirrored Cabinets	Dimensions	Ref.	Exc. VAT	Inc. VAT
40 1-Door Mirrored Cabinet	400 x 135 x 615mm	19119	£147.00	£176.40
50 1-Door Mirrored Cabinet	500 x 135 x 615mm	19120	£174.00	£208.80
60 2-Door Mirrored Cabinet	600 x 135 x 615mm	19113	£212.00	£254.40
70 2-Door Mirrored Cabinet	700 x 135 x 615mm	19114	£234.00	£280.80
80 2-Door Mirrored Cabinet	800 x 135 x 615mm	19115	£261.00	£313.20
100 3-Door Mirrored Cabinet	1000 x 135 x 615mm	19117	£305.00	£366.00
120 3-Door Mirrored Cabinet	1200 x 135 x 615mm	19118	£375.00	£450.00

Eden Mirrored Cabinets

2 YEAR MANUFACTURERS GUARANTEE

GENESIS

Eden 40 Mirrored Cabinet Detail

Eden 50 1-Door Mirrored Cabinet

Eden 60 2-Door Mirrored Cabinet

Includes Shaver Socket

Eden 80 2-Door Mirrored Cabinet

Includes Shaver Socket

Eden 120 3-Door Mirrored Cabinet

		Gloss White			Textured Grey Walnut*			Matt Moonlight Blue (MMB) / Platinum Grey (PL)		
Eden Mirrored Cabinets	**Dimensions**	**Ref.**	**Exc. VAT**	**Inc. VAT**	**Ref.**	**Exc. VAT**	**Inc. VAT**	**Ref.**	**Exc. VAT**	**Inc. VAT**
Eden 40 1-Door Cabinet	400 x 160 x 600mm	ED40MCW	£139.00	**£166.80**	ED40MCWN	£102.00	**£122.40**	n/a	-	-
Eden 50 1-Door Cabinet	500 x 160 x 600mm	ED50MCW	£164.00	**£196.80**	n/a	-	-	ED50MCMMB/PL	£193.00	**£231.60**
Eden 60 2-Door Cabinet*	600 x 160 x 600mm	ED60MCW	£282.00	**£338.40**	ED60MCWN	£244.00	**£292.80**	ED60MCMMB/PL	£316.00	**£379.20**
Eden 80 2-Door Cabinet*	800 x 160 x 600mm	ED80MCW	£315.00	**£378.00**	n/a	-	-	n/a	-	-
Eden 100 3-Door Cabinet	1000 x 160 x 600mm	ED100MCW	£292.00	**£350.40**	ED100MCWN	£214.00	**£256.80**	n/a	-	-
Eden 120 3-Door Cabinet	1200 x 160 x 600mm	ED120MCW	£335.00	**£402.00**	ED120MCWN	£245.00	**£294.00**	n/a	-	-

***60 & 80 Eden Mirrored Cabinets include Shaver Socket**

**Textured Walnut Finish - While Stocks Last*

Oregon, Gemini & Monica Cabinets

2 YEAR MANUFACTURERS GUARANTEE

Oregon Mirrored Cabinet available in White, Matt Moonlight Blue, Black & Grey Finishes

Oregon 60 Mirrored Cabinet

Dimensions: 600 x 160 x 600mm

	Ref.	Exc. VAT	Inc. VAT
Gloss White	ORE60CAB-W	£212.00	**£254.40**
Matt Moonlight Blue	ORE60CAB-MMB	£222.00	**£266.40**
Matt Black	ORE60CAB-MB	£222.00	**£266.40**
Matt Grey	ORE60CAB-MG	£222.00	**£266.40**
Platinum Grey	ORE60CAB-PL	£222.00	**£266.40**
Pearl Grey	ORE60CAB-PG	£222.00	**£266.40**

Gemini 60 Mirrored Cabinet

Dimensions: 600 x 160 x 600mm

	Ref.	Exc. VAT	Inc. VAT
Pearl Grey	GM60MCPG	£450.00	**£540.00**
Black Oak	GM60MCBO	£399.00	**£478.80**

Monica 50 1-Door Mirrored Cabinet

Includes Shaver Socket, Internal Light & 2 Glass Shelves

Monica 60 2-Door Mirrored Cabinet

Includes Shaver Socket, Internal Light & 2 Glass Shelves

Gloss White

Monica Mirrored Cabinets	Dimensions	Ref.	Exc. VAT	Inc. VAT
Monica 50 1-Door Mirrored Cabinet & Lights	500 x 160 x 600mm	M50CW	£546.00	**£655.20**
Monica 60 2-Door Mirrored Cabinet & Lights	600 x 160 x 600mm	M60CW	£591.00	**£709.20**

Standard Mirrors & Lights

Options 60 Plain Mirror

Options 100 Plain Mirror

Options Plain Mirrors	Dimensions	Ref.	Exc. VAT	Inc. VAT
40 Plain Mirror	400 x 740mm	19450	£73.00	£87.60
50 Plain Mirror	500 x 740mm	19314	£81.00	£97.20
60 Plain Mirror	600 x 740mm	19309	£90.00	£108.00
70 Plain Mirror	700 x 740mm	19310	£99.00	£118.80
80 Plain Mirror	800 x 740mm	19311	£108.00	£129.60
100 Plain Mirror	1000 x 740mm	19304	£125.00	£150.00
120 Plain Mirror	1200 x 740mm	19500	£142.00	£170.40

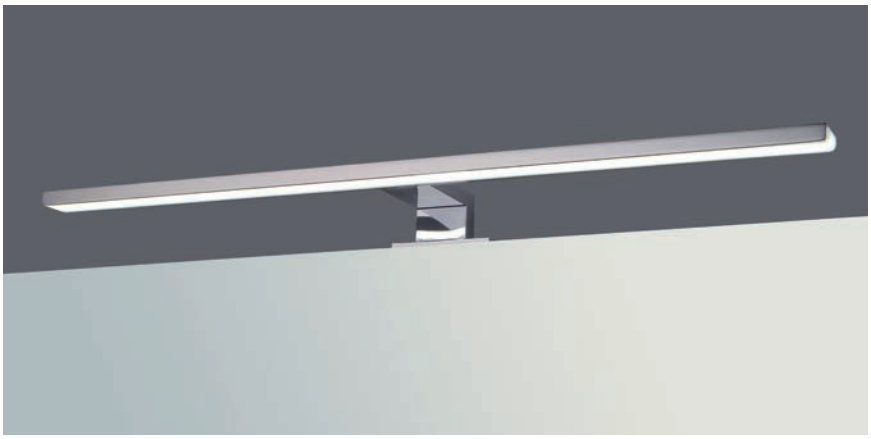

Deluxe Light Fitting can be retrospectively fitted to most Mirrors and Mirrored Cabinets

Deluxe 300 LED Light Fitting - 5.5 Watt
Ref: ML002-300A Finish: Chrome
Dimensions: 300 x 108 x 40mm
£55.00 Exc. VAT **£66.00 Inc. VAT**

Deluxe 500 LED Light Fitting - 8 Watt
Ref: ML002-500A Finish: Chrome
Dimensions: 500 x 108 x 40mm
£65.00 Exc. VAT **£78.00 Inc. VAT**

Standard Mirrors & Lights

Battery Operated Luxury Mirror & Mirrored Cabinet

2 YEAR MANUFACTURERS GUARANTEE

Mirror - 2 Size Options

Atlanta Battery Operated Mirror

- 60 Integrated LED Lights
- Battery Operated *(3 x AA Batteries - Not Supplied)*
- Suitable for Re-Chargeable Batteries
- Average 80 Hours Battery Life *(8-12 Hours Battery Life on Full Light Power)*
- 2 Size Options - 500mm & 600mm

Dimensions: 500mm(W) x 700mm(H)
Ref: ASC12BA
£106.00 Exc. VAT **£127.20 Inc. VAT**

Dimensions: 600mm(W) x 700mm(H)
Ref: ASC16BA
£113.00 Exc. VAT **£135.60 Inc. VAT**

Also available mains powered See p378

Mirrored Cabinet - 2 Size Options

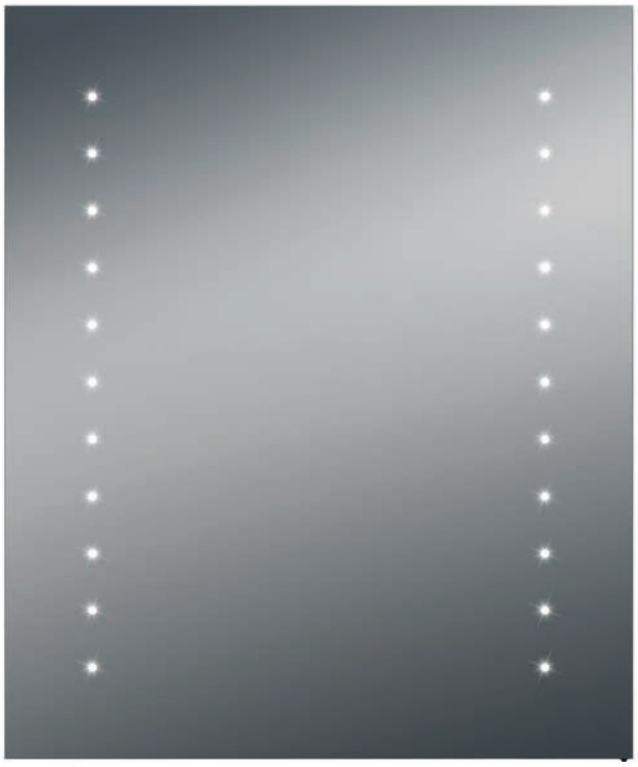

500mm 1-Door Cabinet

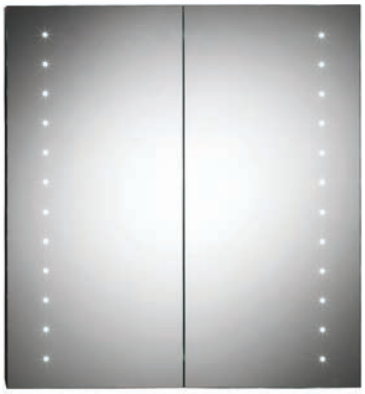

600mm 2-Door Cabinet

Verona Battery Operated Mirrored Cabinet

- Integrated LED Lights
- Battery Operated *(8 x AA Batteries - Not Supplied)*
- Suitable for Re-Chargeable Batteries
- Average 4-5 Hours Battery Life if continuously left on
- Soft Close Doors
- Double Mirrored Doors
- 2 Size Options - 500m & 600mm

Dimensions: 500mm(W) x 600mm(H) x 140mm(D)
Ref: ASC5784
£297.00 Exc. VAT **£356.40 Inc. VAT**

Dimensions: 600mm(W) x 700mm(H) x 140mm(D)
Ref: ASC6784
£376.00 Exc. VAT **£451.20 Inc. VAT**

Porto Floorstanding

Battery Operated Floorstanding Mirror Option with LED Lights

Wall-Hung

Floorstanding

Porto Battery Operated Mirror

- Black Frame
- LED Light Surround
- Battery Operated *(8 x AA Batteries - Not Supplied)*
- Can be Floorstanding or Wall-Hung
- If Wall-Hung, can be installed Horizontally or Vertically

Dimensions: 1500mm(H) x 400mm(W)

Ref: QXM15040

£224.00 Exc. VAT **£268.80 Inc. VAT**

Radius & Opal Black

Luxury Mirrors with Integrated Lights

2 YEAR MANUFACTURERS GUARANTEE

60 Round Mirror

Radius Round Mirror

- 600mm round mirror
- Integrated LED Light around the mirror
- Sensor Switch
- Demister Pad
- Colour Change (White to Warm) - Press & Hold On/Off Button

Dimensions: 600mm(W) x 600mm(H) x 30mm(D)

Ref: ASC6602

£243.00 Exc. VAT **£291.60 Inc. VAT**

Round Mirror with Black Frame

Opal Round Mirror

- 600mm round mirror
- Integrated LED Light around the mirror
- Sensor Switch
- Demister Pad
- Colour Change (White to Warm) - Press & Hold On/Off Button

Dimensions: 600mm(W) x 600mm(H) x 32mm(D)

Ref: ASC0606-25

£250.00 Exc. VAT **£300.00 Inc. VAT**

Urban & Rimini

Luxury Mirrors with Integrated Lights

2 Size Options

Urban Mirror

- Includes chrome LED light fitting
- Sensor Switch
- Demister Pad
- IP44 Rated

Dimensions: 400mm(W) x 700mm(H) x 105mm(D)

Ref: ASC4070T

£172.00 Exc. VAT **£206.40 Inc. VAT**

Dimensions: 600mm(W) x 700mm(H) x 105mm(D)

Ref: ASC6070T

£183.00 Exc. VAT **£219.60 Inc. VAT**

1100mm Tall Mirror

Rimini Tall Mirror

- 1100mm tall
- Integrated LED Light around the mirror
- Sensor Switch
- Demister Pad
- Colour Change (White to Warm) - Press & Hold On/Off Button

Dimensions: 400mm(W) x 1100mm(H) x 30mm(D)

Ref: ASC11400-OV-2

£242.00 Exc. VAT **£290.40 Inc. VAT**

Utah & Nevada

Luxury Mirrors with Integrated Lights - Including Full Length & Black Frame Options

2 YEAR MANUFACTURERS GUARANTEE

Black Framed Mirror

Utah Mirror

- 2 Size Options - 500 & 600mm
- Integrated LED Light Strip
- Steel Frame in Matt Black Finish
- Demister Pad
- Sensor Switch
- IP44 rated

Dimensions: 500mm(W) x 600mm(H) x 30mm(D)
Ref: ASC5060
£254.00 Exc. VAT **£304.40 Inc. VAT**

Dimensions: 600mm(W) x 700mm(H) x 30mm(D)
Ref: ASC6071B
£273.00 Exc. VAT **£327.60 Inc. VAT**

Includes Full Length Options

Nevada Mirror

- Integrated LED Light Strip
- Aluminium Frame in Brushed Silver Finish
- Demister Pads (2 on larger sizes)
- Sensor Switch
- **Can be Installed Portrait or Landscape**
- 3 Size Options - 600mm, 1200mm & 1500mm

Dimensions: 600mm(W) x 400mm(H)
Ref: ASC4060
£158.00 Exc. VAT **£189.60 Inc. VAT**

Dimensions: 1200mm(W) x 450mm(H)
Ref: ASC556397A
£264.00 Exc. VAT **£316.80 Inc. VAT**

Dimensions: 1500mm(W) x 450mm(H)
Ref: ASC556416A
£302.00 Exc. VAT **£362.40 Inc. VAT**

Cornell

Luxury Mirrors with Integrated Lights

Available
600mm & 1200mm

Cornell Mirror

- 2 Integrated LED Light Strips
- Demister Pad
- Downlighting from the bottom of the mirror
- Sensor Switch
- 2 Size Options - 600mm & 1200mm

Dimensions: 600mm(W) x 700mm(H) x 30mm(D)

Ref: ASC12338

£195.00 Exc. VAT **£234.00 Inc. VAT**

Dimensions: 1200mm(W) x 700mm(H) x 30mm(D)

Ref: ASC12340

£290.00 Exc. VAT **£348.00 Inc. VAT**

Integrated LED Light Strip

Downlighting from the bottom of the mirror

Charlotte Mirrors

Luxury Mirrors with Integrated Lights, Colour Change & Intensity Dimmer Options

2 YEAR MANUFACTURERS GUARANTEE

Charlotte 50 - White Light Setting

Charlotte 60 - Warm Light Setting

Charlotte Mirror

- Integrated LED Light Strip
- Lights entirely around the outside of the mirror
- 3 Touch Sensor Switch
- Colour Change (White to Warm) & Light Intensity Dimmer
- Demister Pad
- Can be Installed Portrait or Landscape
- 2 Size Options - 500mm & 600mm

Dimensions: 500mm(W) x 700mm(H) x 33mm(D)
Ref: ASC5700LY
£241.00 Exc. VAT **£289.20 Inc. VAT**

Dimensions: 600mm(W) x 800mm(H) x 33mm(D)
Ref: ASC6800LY
£285.00 Exc. VAT **£342.00 Inc. VAT**

Can be installed Portrait or Landscape

Button 1 - On/Off
Button 2 - Colour Change Switch
Button 3 - Light Intensity Dimmer Switch

Calvus Mirrored Cabinets

2 YEAR MANUFACTURERS GUARANTEE

Luxury Mirrored Cabinets with Integrated Lights

60 & 80 Mirrored Cabinet Features 3 LED Light Strips

4 Size Options - 500mm, 600mm, 800mm & 1200mm

Calvus Mirrored Cabinets

- Integrated LED Light Strips
- Double Mirrored Doors
- Soft Close Hinges
- Shaver Socket
- USB Charger
- Sensor Switch
- Door Configuration:
  500mm - 1 Door
  600mm - 2 Door
  800mm - 2 Door
  1200mm - 3 Door

Dimensions: 500mm(W) x 700mm(H) x 126mm(D)
Ref: ASC5070
£568.00 Exc. VAT **£681.60 Inc. VAT**

Dimensions: 600mm(W) x 700mm(H) x 126mm(D)
Ref: ASC6701YU
£661.00 Exc. VAT **£793.20 Inc. VAT**

Dimensions: 800mm(W) x 700mm(H) x 126mm(D)
Ref: ASC8070
£766.00 Exc. VAT **£919.20 Inc. VAT**

Dimensions: 1200mm(W) x 700mm(H) x 126mm(D)
Ref: ASC1270
£991.00 Exc. VAT **£1,189.20 Inc. VAT**

Stratus & Pileus Mirrored Cabinets

Luxury Mirrored Cabinets with Aluminium Sides

2 YEAR MANUFACTURERS GUARANTEE

500mm Width

600mm Width

Sensor Switch

Shaver Socket

Stratus Mirrored Cabinet

- Single Door
- Integrated LED Lights
- Double-Sided Mirrored Doors
- Shaver Socket
- Soft Close Doors
- Sensor Switch
- Demister Pad

Dimensions: 500mm(W) x 600mm(H) x 140mm(D)

Ref: ASC5704

£472.00 Exc. VAT **£566.40 Inc. VAT**

Pileus Mirrored Cabinet

- 2 Doors
- Integrated LED Lights
- Double-Sided Mirrored Doors
- Shaver Socket
- Soft Close Doors
- Sensor Switch
- Demister Pad

Dimensions: 600mm(W) x 650mm(H) x 140mm(D)

Ref: ASC5709

£596.00 Exc. VAT **£715.20 Inc. VAT**

Opacus & Cirrus

2 YEAR MANUFACTURERS GUARANTEE

Luxury Mirrored Cabinet with Aluminium Sides

400mm Width

500mm Width

Opacus Mirrored Cabinets

- Single Door
- Integrated LED Light Strips
- Shaver Socket
- Soft Close Doors
- Sensor Switch
- Demister Pad

Dimensions: 400mm(W) x 500mm(H) x 140mm(D)

Ref: ASC7504

£387.00 Exc. VAT **£464.40 Inc. VAT**

Cirrus Mirrored Cabinet

- Single Door
- Integrated LED Light Strips
- Shaver Socket
- Soft Close Doors
- Sensor Switch
- Demister Pad

Dimensions: 500mm(W) x 600mm(H) x 140mm(D)

Ref: ASC7505

£478.00 Exc. VAT **£573.60 Inc. VAT**

Cumulus & Alto Cabinets

Luxury Mirrored Cabinet with Aluminium Sides

2 YEAR MANUFACTURERS GUARANTEE

700mm Width

Sensor Switch

Shaver Socket

Cosmetic Mirror

Cumulus Mirrored Cabinet

- 2 Doors
- Integrated LED Light Strips
- Shaver Socket
- Soft Close Doors
- Integrated Cosmetic Magnifying Mirror
- Sensor Switch

Dimensions: 700mm(W) x 650mm(H) x 140mm(D)

Ref: ASC7513

£565.00 Exc. VAT **£678.00 Inc. VAT**

600mm Width

Sensor Switch

Shaver Socket

Speaker

Bluetooth Function

Alto Mirrored Cabinet

- Single Door
- Integrated LED Light Strips
- Shaver Socket
- Soft Close Doors
- Bluetooth Function
- Sensor Switch

Dimensions: 600mm(W) x 650mm(H) x 152mm(D)

Ref: ASC5705

£620.00 Exc. VAT **£744.00 Inc. VAT**

Bologna, Roma & Virginia Mirrors

Luxury Mirrors with Integrated Lights

395mm Width

400mm or 500mm Width

Bologna Mirror

- Integrated LED Light Strips
- Glass Shelf with Integrated Lights
- Sensor Switch

Dimensions: 395mm(W) x 600mm(H) x 140mm(D)

Ref: QXM-G6

£147.00 Exc. VAT **£176.40 Inc. VAT**

Roma & Virginia Mirrors

- Integrated LED Light Strips
- Sensor Switch
- Demister Pad

Roma Mirror

Dimensions: 400mm(W) x 800mm(H) x 40mm(D)

Ref: ASC4805-40

£200.00 Exc. VAT **£240.00 Inc. VAT**

Virginia Mirror

Dimensions: 500mm(W) x 800mm(H) x 40mm(D)

Ref: ASC4805-50

£212.00 Exc. VAT **£254.40 Inc. VAT**

Sensor Switch

Arizona & Portland Mirrors

Luxury Mirrors with Integrated Lights

2 YEAR MANUFACTURERS GUARANTEE

600mm Width

600mm Width

Arizona Mirror

- Integrated Strip Lights
- Can be installed Horizontally or Vertically
- Sensor Switch
- Demister Pad

Dimensions: 600mm(W) x 700mm(H) x 43mm(D)

Ref: ASC6700A

£247.00 Exc. VAT **£296.40 Inc. VAT**

Portland Mirror

- Integrated LED Light Strips
- Sensor Switch
- Demister Pad

Dimensions: 600mm(W) x 700mm(H) x 31mm(D)

Ref: ASC6070

£155.00 Exc. VAT **£186.00 Inc. VAT**

Sensor Switch

Kansas & Aston Mirrors

Luxury Mirrors with Integrated Lights

600mm Width

Kansas Mirror

- Integrated LED Light Strips
- Can be installed Horizontally or Vertically
- Sensor Switch
- Demister Pad

Dimensions: 600mm(W) x 800mm(H) x 40mm(D)

Ref: ASC6806-80

£235.00 Exc. VAT **£282.00 Inc. VAT**

600mm & 800mm Height

Aston Mirror

- Integrated Side Lights
- Can be installed Horizontally or Vertically
- Sensor Switch
- Demister Pad

Dimensions: 600mm(W) x 600mm(H) x 29mm(D)

Ref: ASC6060E

£222.00 Exc. VAT **£266.40 Inc. VAT**

Dimensions: 600mm(W) x 800mm(H) x 29mm(D)

Ref: ASC5800E

£247.00 Exc. VAT **£296.40 Inc. VAT**

Warwick & Duke Mirrors

Luxury Mirror with Integrated Lights

2 YEAR MANUFACTURERS GUARANTEE

500mm Width

500mm Width

Sensor Switch

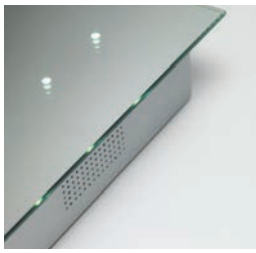

Speaker

Clock Control

Bluetooth Function

Warwick Mirror

- Integrated Side Lights
- Sensor Switch
- Demister Pad

Dimensions: 500mm(W) x 700mm(H) x 48mm(D)

Ref: ASC5700

£214.00 Exc. VAT **£256.80 Inc. VAT**

Duke Mirror

- Integrated LED Lights
- LED Clock - Blue Digits
- Bluetooth Function
- Sensor Switch
- Demister Pad

Dimensions: 500mm(W) x 700mm(H) x 70mm(D)

Ref: ASC6801-50

£340.00 Exc. VAT **£408.00 Inc. VAT**

Genesis & Ascent Mirrors

2 YEAR MANUFACTURERS GUARANTEE

Anti-Mist Pads included on all Ascent Mirrors for added convenience to any modern bathroom

All Sensors are located under the mirror on the right hand side

Amazon Mirror

Integrated LED Lights

Dimensions: 500mm(W) x 600mm(H) x 40mm(D)

Ref: QXM-G4

£146.00 Exc. VAT **£175.20 Inc. VAT**

Ferarra Mirror

Integrated LED Lights

Dimensions: 500mm(W) x 700mm(H) x 40mm(D)

Ref: QXM-G3

£150.00 Exc. VAT **£180.00 Inc. VAT**

Rania Mirror

Integrated Back-Lit Light, LED Clock & Shaver Socket

Dimensions: 600mm(W) x 700mm(H) x 55mm(D)

Ref: QXM-G2

£217.00 Exc. VAT **£260.40 Inc. VAT**

Duchess Mirror

Integrated LED Lights & Rear Anti-Mist Pad

Dimensions: 600mm(W) x 700mm(H) x 40mm(D)

Ref: QXM-A13

£202.00 Exc. VAT **£242.40 Inc. VAT**

Atlanta Mirror

Integrated LED Lights & Rear Anti-Mist Pad

Dimensions: 500mm(W) x 700mm(H) x 40mm(D)

Ref: QXM-A12

£179.00 Exc. VAT **£214.80 Inc. VAT**

Discovery Mirror

Integrated LED Lights & LED Clock

Dimensions: 700mm(W) x 600mm(H) x 40mm(D)

Ref: QXM-G7

£220.00 Exc. VAT **£264.00 Inc. VAT**

Atlanta also available battery powered See p363

Western Mirror

Integrated LED Lights, Shaver Socket & Rear Anti-Mist Pad

Dimensions: 800mm(W) x 600mm(H) x 55mm(D)

Ref: QXM-A16

£239.00 Exc. VAT **£286.80 Inc. VAT**

IP44 Rated: Suitable to install in bathroom Zone 2 above the basin, subject to conditions. All Electrical Installations should be carried out by a qualified electrician.

Towel Rails

Our wide selection of heated towel rails are suitable for adding a bit of warmth to a cloakroom or en-suite, or as a stylish addition to any bathroom, with the benefit of a useful hanging space.

Available in a range of finishes - Stainless Steel finish, Chrome, Anthracite, Black Nickel and now Antique Copper - with a variety of sizes and styles, there is something to suit all.

Black Nickel finish is now available in a number of styles and sizes, giving the range a luxurious feel. Mirroring the growing trend towards black within the bathroom the black nickel perfectly complements ever-popular anthracite finish rails, which continues to be available in a number of rail options including the Porto, Kansas horizontal, Royal Bajan, Sofia & Sapphire rails.

With all-electric or dual fuel options offered across the range, and programmable elements available, this is a truly versatile collection.

QX offer classic ladder designs, including the Libra or the Ebony with a projecting towel bar, and contemporary flat rails such as the Aston and Kansas, or for a traditional radiator with a twist, take a look at the Roma rail.

The combination of a mirror with a tall radiator has also been successful and some panel radiators now come with a towel rail with matching anthracite or chrome radiator valves.

The Latina and Livorno rails offer a touch of traditional luxury in Antique Copper finish, with matching radiator valves.

The introduction of the MF1 and MF2 in Matt Black finishes now creates the opportunity to tie the increasingly popular black theme within the bathroom. Together with matching rad valves, these matt black rails provide a simple yet effective contrast within the bathroom.

QX Electric & Dual Fuel Options

5 YEAR MANUFACTURERS GUARANTEE

Why not convert your choice of rail to All-Electric operation

CONVERSION OPTIONS

ALL ELECTRIC / DUAL FUEL

All Electric Options

- Simply select a suitable rail for electric conversion - highlighted with the above logo.
- Add £85.00 +VAT for the conversion to All-Electric use, including a pre-blended heat-transfer fluid, with frost and corrosion protection.
- Add your choice of Electric Element
- Decide if you require a Thermo Control Plate (supplied separately)
- Arrange for a suitably qualified electrician to fit your electric towel rail

CONVERSION OPTIONS

ALL ELECTRIC / DUAL FUEL

Dual Fuel Options

To provide dual use of your towel warmer from the central heating system in winter and with your electric element during the summer months.

- Simply select a rail suitable for installation of an electric element - highlighted with the above logo.
- Select your choice of element based on the required Watt output and length of element (detailed below and opposite)
- Decide if you need a Chrome T-Piece, Corner Adaptor or Thermo Control Plate
- Arrange for a suitably qualified electrician to fit your electric towel rail, having selected the appropriate valves for your application

Electric Element Options

Electric Elements, including Chrome T-Piece - Adding an electric element to one of our QX rails gives you the flexibility of heating your rail electrically during the summer months, as well as operating as part of your central heating system in the winter. IP Rating - IP64

Refer to the details of your specific radiator for recommended lengths and watt requirements

Description	Length	Ref.	Exc. VAT	Inc. VAT
150 Watt Electric Manual Element, suitable for rails with output between 300 & 499W	300mm	TRE150	£45.00	**£54.00**
250 Watt Electric Manual Element, suitable for rails with output between 500 & 799W	350mm	TRE250	£45.00	**£54.00**
400 Watt Electric Manual Element, suitable for rails with output between 800 & 1199W	400mm	TRE400	£46.00	**£55.20**
600 Watt Electric Manual Element, suitable for rails with output between 1200 & 1599W	700mm	TRE600	£47.00	**£56.40**
800 Watt Electric Manual Element, suitable for rails with output between 1600 & 1999W	800mm	TRE800	£70.00	**£84.00**

Corner Valve Adapter
To be used in conjunction with towel rail element to adapt the straight outlet of the rail to match the angle of the element T-Piece

Ref: DFE12	Finish: Chrome
£7.00 Exc. VAT	**£8.40 Inc. VAT**

Element T-Piece Only

Ref: ELE-TP	Finish: Chrome
£9.00 Exc. VAT	**£10.80 Inc. VAT**

Thermo Control Plate

Thermo Control Plate
Have full control of your Towel Rail Electric Element by wiring directly into this unique control plate.

IP Rating: IPX5

Ref: TCP200	Finish: White
£86.00 Exc. VAT	**£103.20 Inc. VAT**

Control Plate Cover

Ref: TCPSSC	Finish: Chrome
£25.00 Exc. VAT	**£30.00 Inc. VAT**

Control Plate Cover - Chrome

Features:
- Simple On-Off Button Control
- Output control buttons to increase or decrease temperature
- 2-Hour Boost Timer, Full Power for 2-Hours
- Controls 150W to 800W Elements
- 85mm Square
- IP55 Rated
- Active LED Displays

Ascent Radiator Element Range

A range of Programmable Element Control Options

5 YEAR MANUFACTURERS GUARANTEE

NOTE: Element must be installed vertically

QX Ascent 2-Hour Drying Element

Activate your electric or dual fuel towel rail to provide a 2-hour drying function to dry your towel after use.

- 5-Step Temperature Control
- Low energy consumption on stand-by
- 2-Hour Drying Function
- Choice of Element Power & Length
- Suitable for Electric or Dual Fuel use
- Includes Element - Excludes T-Piece
- IP Rating - IPX5

Watt	Length	Ref.	Exc. VAT	Inc. VAT
200 Watt	275mm	MOA200CP	£147.00	**£176.40**
300 Watt	300mm	MOA300CP	£147.00	**£176.40**
400 Watt	333mm	MOA400CP	£147.00	**£176.40**
600 Watt	370mm	MOA600CP	£147.00	**£176.40**
800 Watt	475mm	MOA800CP	£147.00	**£176.40**

Pictured with Terma Split Element
(Sold Separately - Detailed Below)

Programmable Control

Ref: KTX3CP Finish: Chrome

£136.00 Exc. VAT

£163.20 Inc. VAT

PLUS the cost of your selected Terma Split Element Size (detailed below)

QX Ascent Programmable Element Control

Control your electric or dual fuel towel rail to pre-warm your bathroom Monday-Sunday and turn off when your towel is dry and your bathroom warm

- LCD Display with actual time (clock) and temperature
- Multi-step temperature setting in a range of 30-60 ºC
- Advanced timer feature with 4 time zones
- High quality and modern design touch keypad
- Double protection against overheating
- Alarm modes to identify sensor fault and overheating
- Automatic anti-freeze function to prevent liquid from freezing when temperatures fall below 5-7 C
- Suitable for Electric or Dual Fuel use
- IP Rating - IPX5

QX Ascent Terma Split Element

Watt	Length	Ref.	Exc. VAT	Inc. VAT
200 Watt	285mm	TS1/2	£49.00	**£58.80**
300 Watt	310mm	TS1/3	£49.00	**£58.80**
400 Watt	345mm	TS1/4	£49.00	**£58.80**
600 Watt	375mm	TS1/6	£49.00	**£58.80**
800 Watt	485mm	TS1/8	£49.00	**£58.80**

- Select your choice of element power length
- Easy and safe to install
- Easy to change and replace if required
- Excludes T-Piece
- Must be installed vertically
- IP Rating - IPX5

NOTE: Element must be installed vertically

Ascent Square Elements

A range of Programmable Element Control Options

NOTE: Element must be installed vertically

QX Ascent Square 2-Hour Drying Element

Activate your electric or dual fuel towel rail to provide a 2-hour drying function to dry your towel after use.

- Selection of 2 heating levels - 45℃ or 60℃
- Automatic switch-off option
- Simple, single button control
- Can also be controlled wirelessly by either the DT-IR1 or the TT-IR Remote Controls below
- Built-in electronic temperature sensor ensuring precise temperature control
- Choice of element power & length
- Supplied with silver/grey electric cable
- Includes Element - Excludes T-Piece
- Anti-Freeze function
- Supplied in Chrome Finish
- IP Rating - IPX5

Watt	Length	Ref.	Exc. VAT	Inc. VAT
200 Watt	270mm	ONESQ200CP	£180.00	**£216.00**
300 Watt	295mm	ONESQ300CP	£180.00	**£216.00**
400 Watt	330mm	ONESQ400CP	£180.00	**£216.00**
600 Watt	360mm	ONESQ600CP	£180.00	**£216.00**
800 Watt	470mm	ONESQ800CP	£180.00	**£216.00**

Dimensions: 140mm x 80mm x 23mm

QX Ascent Wireless Programmable Element Control - TT-IR

Use in conjunction with the QX Ascent Square Element to wirelessly control your electric or dual fuel towel rail.

£193.00 Exc. VAT **£231.60 Inc. VAT**

- To be used with the QX Ascent Square Element above
- Provides programmable, wireless remote control operation of the element
- Multi-function heating modes including Comfort, Economy, Automatic, Absence & Shutdown
- Automatic Mode sets a variable temperature over a 7-Day/24-Hour period
- LCD Display with clock and temperature
- Can be wall-mounted or freestanding on a shelf or cupboard
- Battery operated
- IP30 Rated
- Supplied in White Finish
- One control will operate multiple elements

Dimensions: 800mm x 80mm x 23mm

QX Ascent Wireless Programmable Element Control - DT-IR1

Use in conjunction with the QX Ascent Square Element to wirelessly control your electric or dual fuel towel rail to provide three heating modes.

£125.00 Exc. VAT **£150.00 Inc. VAT**

- To be used with the QX Ascent Square Element above
- Provides programmable, wireless remote control operation of the element
- Three heating modes - Manual, Automatic & Drying
- Use Manual Mode to set a 'comfort' or 'economy' room temperature
- Use Automatic Mode to set a variable temperature over a 24-hour period
- Use Drying Mode to set a fixed 'drying' time from 15 minutes to 4 hours
- LCD Display showing temperature
- Wall-mounted only
- Battery Operated
- IP30 Rated
- Supplied in Brushed Silver Finish
- One control will operate multiple elements

QX Flat Ladder & Utah Black Rails

Central Heating Towel Rails

5 YEAR MANUFACTURERS GUARANTEE

Flat Ladder Rail - Wall Projection: 75-100mm
Width of Tubes - 22mm

Utah Rail in Matt Black Finish
Wall Projection: 75-100mm

Flat Ladder Rails - Chrome

Ref.	Dimensions	Tapping Centres	Output (W)	Output (BTU)	Element Size	Finish	Exc. VAT	Inc. VAT
MF7CP	800 x 450mm	400	246	843	250W	Chrome	£116.00	£139.20
MF8CP	1200 x 450mm	400	347	1188	400W	Chrome	£155.00	£186.00
MF9CP	1780 x 450mm	400	520	1775	600W	Chrome	£232.00	£278.40
MF1CP	800 x 500mm	450	268	917	250W	Chrome	£122.00	£146.40
MF2CP	1200 x 500mm	450	376	1286	400W	Chrome	£164.00	£196.80
MF3CP	1780 x 500mm	450	525	1797	600W	Chrome	£240.00	£288.00
MF4CP	800 x 600mm	550	310	1061	250W	Chrome	£134.00	£160.80
MF5CP	1200 x 600mm	550	431	1474	400W	Chrome	£181.00	£217.20
MF6CP	1780 x 600mm	550	594	2301	600W	Chrome	£272.00	£326.40
MF10CP	1200 x 750mm	700	546	1865	600W	Chrome	£253.00	£303.60

Flat Ladder Rails - White

Ref.	Dimensions	Tapping Centres	Output (W)	Output (BTU)	Element Size	Finish	Exc. VAT	Inc. VAT
MF1W	800 x 500mm	450	327	1120	250W	White	£68.00	£81.60
MF2W	1200 x 500mm	450	456	1558	400W	White	£93.00	£111.60
MF4W	800 x 600mm	550	378	1292	250W	White	£75.00	£90.00
MF5W	1200 x 600mm	550	520	1778	400W	White	£102.00	£122.40
MF6W	1780 x 600mm	550	704	2409	600W	White	£148.00	£177.60

Utah Ladder Rails - Matt Black

Ref.	Dimensions	Tapping Centres	Output (W)	Output (BTU)	Element Size	Finish	Exc. VAT	Inc. VAT
UTA-8X5MB	800 x 500mm	450	327	1120	250W	Matt Black	£72.00	£86.40
UTA-12X5MB	1200 x 500mm	450	456	1558	400W	Matt Black	£99.00	£118.80

QX Curved Ladder & Ebony Rails

Central Heating Towel Rails

5 YEAR MANUFACTURERS GUARANTEE

CONVERSION OPTIONS
ALL ELECTRIC
DUAL FUEL

Curved Ladder Rail
Wall Projection: 105-130mm
Width of Tubes - 22mm

Ebony Rail - Wall Projection: 90-100mm

Curved Ladder Rails - Chrome

Ref.	Dimensions	Tapping Centres	Output (W)	Output (BTU)	Element Size	Finish	Exc. VAT	Inc. VAT
MC8CP	1200 x 450mm	400	412	1406	400W	Chrome	£162.00	£194.40
MC1CP	800 x 500mm	450	280	957	250W	Chrome	£124.00	£148.80
MC2CP	1200 x 500mm	450	393	1344	400W	Chrome	£170.00	£204.00
MC4CP	800 x 600mm	550	324	1107	250W	Chrome	£139.00	£166.80
MC5CP	1200 x 600mm	550	450	1540	400W	Chrome	£188.00	£225.60
MC6CP	1780 x 600mm	550	623	2129	600W	Chrome	£277.00	£332.40

Ebony Rail - with Projecting Towel Bar

Ref.	Dimensions	Tapping Centres	Output (W)	Output (BTU)	Element Size	Finish	Exc. VAT	Inc. VAT
EBO-8X5	800 x 500mm	450	354	1209	300W	Chrome	£134.00	£160.80
EBO-12X5	1200 x 500mm	450	524	1788	600W	Chrome	£193.00	£231.60
EBO-12X6	1200 x 600mm	550	610	2083	600W	Chrome	£215.00	£258.00

Radiator Valves

10 YEAR MANUFACTURERS GUARANTEE

Radiator Valve options including Thermostatic, available in a number of finishes

Thermostatic Radiator Valves (Pair) Angled or Straight *(shown Angled)*
Ref: TRV01/02CP Finish: Chrome
£33.00 Exc. VAT **£39.60 Inc. VAT**

Thermostatic Radiator Valves (Pair) Angled or Straight *(shown Angled)*
Ref: TRV03/04 Finish: Anthracite
£36.00 Exc. VAT **£43.20 Inc. VAT**

Round Radiator Valves (Pair) Angled or Straight *(shown Angled)*
Ref: RV-V705/709 Finish: Chrome
£27.00 Exc. VAT **£32.40 Inc. VAT**

Round Matt Black Radiator Valves (Pair) Angled or Straight *(shown Angled)*
Ref: RV-RANGMB/RSTMB
£31.00 Exc. VAT
£37.20 Inc. VAT

Round Anthracite Radiator Valves (Pair) Angled or Straight *(shown Angled)*
Ref: RV-RANGAN/RSTAN
£26.00 Exc. VAT
£31.20 Inc. VAT

Round Black Nickel Radiator Valves (Pair) Angled or Straight *(shown Angled)*
Ref: RV-RANGBN/RSTBN
£31.00 Exc. VAT
£37.20 Inc. VAT

Cubic Radiator Valves (Pair) Angled or Straight *(shown Angled)*
Ref: RV/V725/724 Finish: Chrome
£31.00 Exc. VAT **£37.20 Inc. VAT**

Cubic Corner Radiator Valves (Pair)
Ref: RV-CUBCOR Finish: Chrome
£54.00 Exc. VAT **£64.80 Inc. VAT**

Traditional Radiator Valves (Pair) Angled or Straight *(shown Angled)*
Ref: RV/V710 / 707 Finish: Chrome
£39.00 Exc. VAT **£46.80 Inc. VAT**

Traditional Black Nickel Radiator Valves (Pair) - Angled Only
Ref: RV-XANGBN
£46.00 Exc. VAT **£55.20 Inc. VAT**

Traditional Antique Copper Radiator Valves (Pair) - Angled Only
Ref: RV-XANGAC
£46.00 Exc. VAT **£55.20 Inc. VAT**

Corner Radiator Valves (Pair)
Ref: RV-CORN Finish: Chrome
£36.00 Exc. VAT **£43.20 Inc. VAT**

Libra Stainless Steel Rails

Central Heating Towel Rails

Libra 1200 x 500 Rail - Wall Projection: 100mm

Libra Horizontal 500 x 1200 Rail - Wall Projection: 102mm

Libra Horizontal 600 x 800 Rail
Same bar configuration for the 600 x 1000 rail

Libra Stainless Steel Rails

Ref.	Dimensions	Tapping Centres	Output (W)	Output (BTU)	Element Size	Material	Exc. VAT	Inc. VAT
LIB-8X4	800 x 400mm	368	217	740	250W	Stainless Steel	£256.00	£307.20
LIB-8X5	800 x 500mm	468	258	881	250W	Stainless Steel	£279.00	£334.80
LIB-12X5	1200 x 500mm	468	387	1322	400W	Stainless Steel	£387.00	£464.40
LIB-12X6	1200 x 600mm	568	450	1534	400W	Stainless Steel	£420.00	£504.00

Libra Stainless Steel Horizontal Rails

Ref.	Dimensions	Tapping Centres	Output (W)	Output (BTU)	Element Size	Material	Exc. VAT	Inc. VAT
LIB-6X8	600 x 800mm	768	311	1062	300W	Stainless Steel	£275.00	£330.00
LIB-6X10	600 x 1000mm	968	377	1286	400W	Stainless Steel	£304.00	£364.80
LIB-8X10	800 x 1000mm	968	468	1596	400W	Stainless Steel	£363.00	£435.60
LIB-5X12	500 x 1200mm	1168	348	1187	300W	Stainless Steel	£286.00	£343.20

Aries & Porto Rails

Aries Rails are Stainless Steel

5 YEAR MANUFACTURERS GUARANTEE

Aries Rail - Wall Projection: 104mm

Porto 800 x 500 Rail - Wall Projection: 98mm

Aries Stainless Steel Rails

Ref.	Dimensions	Tapping Centres	Output (W)	Output (BTU)	Element Size	Material	Exc. VAT	Inc. VAT
ARI-8X4	800 x 400mm	365	257	877	250W	Stainless Steel	£281.00	**£337.20**
ARI-8X5	800 x 500mm	465	285	974	250W	Stainless Steel	£306.00	**£367.20**
ARI-12X5	1200 x 500mm	465	417	1423	400W	Stainless Steel	£417.00	**£500.40**
ARI-12X6	1200 x 600mm	565	458	1562	400W	Stainless Steel	£455.00	**£546.00**

Porto Rails

Ref.	Dimensions	Tapping Centres	Output (W)	Output (BTU)	Element Size	Finish	Exc. VAT	Inc. VAT
POR-8X5AN	800 x 500mm	465	310	1059	250W	Anthracite	£120.00	**£144.00**
POR-12X5AN	1200 x 500mm	465	465	1588	400W	Anthracite	£155.00	**£186.00**
POR-16X4AN	1600 x 400mm	365	630	2148	600W	Anthracite	£172.00	**£206.40**

Caribbean & Opal Horizontal

Central Heating Towel Rails

Caribbean 600 x 1000 Rail - Wall Projection: 194mm

Opal 600 x 800 Chrome Rail - Wall Projection: 139mm

Caribbean Horizontal Rail

Ref.	Dimensions	Tapping Centres	Output (W)	Output (BTU)	Element Size	Finish	Exc. VAT	Inc. VAT
CAR-60X10	600 x 1000mm	965	384	1311	400W	Chrome	£217.00	**£260.40**

Opal Horizontal Rail

Ref.	Dimensions	Tapping Centres	Output (W)	Output (BTU)	Element Size	Finish	Exc. VAT	Inc. VAT
OPA-6X8	600 x 800mm	750	381	1299	400W	Chrome	£304.00	**£364.80**
OPA-5X12	500 x 1200mm	1150	439	1498	400W	Chrome	£333.00	**£399.60**

Opalcite Horizontal Rail

Ref.	Dimensions	Tapping Centres	Output (W)	Output (BTU)	Element Size	Finish	Exc. VAT	Inc. VAT
OCT-6X8	600 x 800mm	750	514	1754	400W	Anthracite	£192.00	**£230.40**
OCT-5X12	500 x 1200mm	1150	593	2022	600W	Anthracite	£208.00	**£249.60**

Horizontal Rails

Sapphire & Emerald

Central Heating Towel Rails

5 YEAR MANUFACTURERS GUARANTEE

Sapphire Rail - Wall Projection: 80mm

Emerald Rail - Wall Projection: 80mm
Also shown with Programmable Electric Element (p381)

Sapphire Rail

Ref.	Dimensions	Tapping Centres	Output (W)	Output (BTU)	Element Size	Finish	Exc. VAT	Inc. VAT
SAP-12X5	1200 x 500mm	80	743	2536	600W	Anthracite	£301.00	**£361.20**

Emerald Rail

Ref.	Dimensions	Tapping Centres	Output (W)	Output (BTU)	Element Size	Finish	Exc. VAT	Inc. VAT
EME-12X5	1200 x 500mm	80	388	1324	400W	Chrome	£505.00	**£606.00**

Gothenburg & Stockholm

Central Heating Towel Rails

Gothenburg Rail - Wall Projection: 115mm

Stockholm Rail - Wall Projection: 115mm

Gothenburg Rail

Ref.	Dimensions	Tapping Centres	Output (W)	Output (BTU)	Element Size	Finish	Exc. VAT	Inc. VAT
GO10X5CP	1080 x 550mm	80	993	3389	800W	Chrome	£387.00	**£464.40**

Stockholm Rail

Ref.	Dimensions	Tapping Centres	Output (W)	Output (BTU)	Element Size	Finish	Exc. VAT	Inc. VAT
ST-10X5BN	1080 x 550mm	80	1299	4435	800W	Black Nickel	£504.00	**£604.80**

Royal Bajan

Central Heating Towel Rails in both Chrome and Anthracite Finishes

5 YEAR MANUFACTURERS GUARANTEE

800 x 500 Rail - Wall Projection: 160mm

1000 x 600 Rail - Wall Projection: 160mm

1200 x 500 Rail - Wall Projection: 160mm

Royal Bajan Rails

Ref.	Dimensions	Tapping Centres	Output (W)	Output (BTU)	Element Size	Finish	Exc. VAT	Inc. VAT
ROY-8X5	800 x 500mm	465	296	1010	250W	Chrome	£342.00	£410.40
ROY-12X5	1200 x 500mm	465	566	1931	400W	Chrome	£389.00	£466.80
ROY-10X6	1000 x 600mm	565	407	1389	400W	Chrome	£416.00	£499.20

Royal Bajan Anthracite Rail

Ref.	Dimensions	Tapping Centres	Output (W)	Output (BTU)	Element Size	Finish	Exc. VAT	Inc. VAT
RCT-12X5AN	1200 x 500mm	465	601	2052	600W	Anthracite	£207.00	£248.40

Opal & Opalcite

Central Heating Towel Rails

Opal 800 x 500 Rail - Wall Projection: 139mm

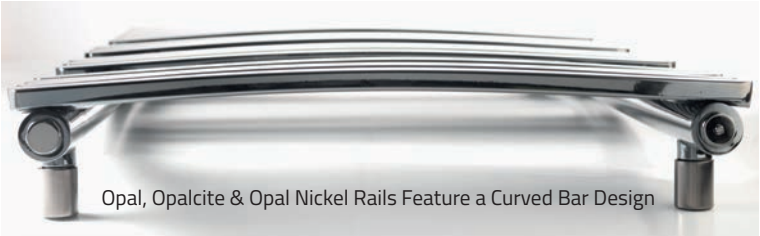
Opal, Opalcite & Opal Nickel Rails Feature a Curved Bar Design

Opalcite Rail - Wall Projection: 139mm

Opal Rails

Ref.	Dimensions	Tapping Centres	Output (W)	Output (BTU)	Element Size	Finish	Exc. VAT	Inc. VAT
OPA-8X5	800 x 500mm	450	312	1065	300W	Chrome	£296.00	£355.20
OPA-12X5	1200 x 500mm	450	468	1598	400W	Chrome	£405.00	£486.00

Opalcite Rails

Ref.	Dimensions	Tapping Centres	Output (W)	Output (BTU)	Element Size	Finish	Exc. VAT	Inc. VAT
OCT6X4	600 x 400mm	350	284	968	250W	Anthracite	£130.00	£156.00
OCT-8X5	800 x 500mm	450	430	1467	400W	Anthracite	£162.00	£194.40
OCT-12X5	1200 x 500mm	450	609	2078	600W	Anthracite	£221.00	£265.20

Opal Nickel & Virgo

Central Heating Towel Rails

5 YEAR MANUFACTURERS GUARANTEE

Opal Nickel 1200 x 500 Rail - Wall Projection: 121mm

Virgo Rail - Wall Projection: 80mm

Opal Nickel Rails

Ref.	Dimensions	Tapping Centres	Output (W)	Output (BTU)	Element Size	Finish	Exc. VAT	Inc. VAT
OP-8X5BN	800 x 500mm	450	587	2003	400W	Black Nickel	£348.00	**£417.60**
OP-12X5BN	1200 x 500mm	450	842	2872	800W	Black Nickel	£463.00	**£555.60**

Virgo Rail

Ref.	Dimensions	Tapping Centres	Output (W)	Output (BTU)	Element Size	Finish	Exc. VAT	Inc. VAT
VIR-14X6	1400 x 600mm	80	528	1805	400W	Chrome	£419.00	**£502.80**

Capricorn & Campania

5 YEAR MANUFACTURERS GUARANTEE

ascent

Central Heating Towel Rails

Capricorn Rail - Wall Projection: 75mm

Campania Rail - Wall Projection: 75mm

Capricorn Rails

Ref.	Dimensions	Tapping Centres	Output (W)	Output (BTU)	Element Size	Finish	Exc. VAT	Inc. VAT
CAP-6X3	600 x 300mm	265	144	490	150W	Chrome	£139.00	£166.80
CAP-12X3	1200 x 300mm	265	280	954	250W	Chrome	£237.00	£284.40
CAP-8X3	800 x 300mm	265	196	669	250W	Chrome	£149.00	£178.80
CAP-10X3	1000 x 300mm	265	246	843	250W	Chrome	£185.00	£222.00
CAP-8X4	800 x 400mm	365	242	828	250W	Chrome	£167.00	£200.40
CAP-10X4	1000 x 400mm	365	305	1042	250W	Chrome	£214.00	£256.80
CAP-8X5	800 x 500mm	465	287	981	250W	Chrome	£193.00	£231.60
CAP-10X5	1000 x 500mm	465	360	1232	400W	Chrome	£243.00	£291.60
CAP-12X5	1200 x 500mm	465	430	1466	400W	Chrome	£327.00	£392.40
CAP-12X6	1200 x 600mm	565	491	1674	400W	Chrome	£368.00	£441.60

Campania Rails

Ref.	Dimensions	Tapping Centres	Output (W)	Output (BTU)	Element Size	Finish	Exc. VAT	Inc. VAT
CAM-8X3	800 x 300mm	265	276	942	250W	Anthracite	£96.00	£115.20
CAM-10X4	1000 x 400mm	365	425	1450	400W	Anthracite	£129.00	£154.80
CAM-12X5	1200 x 500mm	465	592	2021	600W	Anthracite	£170.00	£204.00

Taurus & Gemini

Central Heating Towel Rails

5 YEAR MANUFACTURERS GUARANTEE

Taurus Rail - Wall Projection: 102mm

Gemini Rail - Wall Projection: 125mm

Taurus Rails

Ref.	Dimensions	Tapping Centres	Output (W)	Output (BTU)	Element Size	Finish	Exc. VAT	Inc. VAT
TAU-10X56	1040 x 565mm	515	334	1142	400W	Chrome	£337.00	£404.40

Gemini Rails

Ref.	Dimensions	Tapping Centres	Output (W)	Output (BTU)	Element Size	Finish	Exc. VAT	Inc. VAT
GEM-6X4	600 x 400mm	350	178	610	150W	Chrome	£199.00	**£238.80**
GEM-8X4	800 x 400mm	350	246	893	250W	Chrome	£247.00	**£296.40**
GEM-10X5	1000 x 500mm	450	329	1124	400W	Chrome	£304.00	**£364.80**
GEM-12X5	1200 x 500mm	450	431	1472	400W	Chrome	£387.00	**£464.40**
GEM-14X5	1400 x 500mm	450	464	1586	400W	Chrome	£426.00	**£511.20**

Aston & Aquarius

Central Heating Towel Rails

Aston Rail - Wall Projection: 129-149mm

Aquarius Rail - Wall Projection: 117mm

Aston Rails

Ref.	Dimensions	Tapping Centres	Output (W)	Output (BTU)	Element Size	Finish	Exc. VAT	Inc. VAT
AST-8X5CP	800 x 500mm	450	405	1382	400W	Chrome	£273.00	**£327.60**
AST-12X5CP	1200 x 500mm	450	446	1522	400W	Chrome	£413.00	**£495.60**

Aquarius Rails

Ref.	Dimensions	Tapping Centres	Output (W)	Output (BTU)	Element Size	Finish	Exc. VAT	Inc. VAT
AQU-8X4	800 x 400mm	350	256	874	250W	Chrome	£274.00	**£328.80**
AQU-10X4	1000 x 400mm	350	301	1031	250W	Chrome	£327.00	**£392.40**
AQU-12X5	1200 x 500mm	450	360	1232	400W	Chrome	£443.00	**£531.60**

Amalfi & Parma

Central Heating Towel Rails in Anthracite Finish

5 YEAR MANUFACTURERS GUARANTEE

Amalfi - Wall Projection: 150mm

Thermostatic Radiator Valves (Pair) Angled or Straight *(shown Angled)*

Ref: TRV03/04	Finish: Anthracite
£36.00 Exc. VAT	**£43.20 Inc. VAT**

Parma Horizontal - Wall Projection: 150mm

Amalfi Rail

Ref.	Dimensions	Tapping Centres	Output (W)	Output (BTU)	Element Size	Finish	Exc. VAT	Inc. VAT
AMA-8X5AN	850 x 500mm	80	499	1703	400W	Anthracite	£217.00	**£260.40**

Parma Horizontal Rail

Ref.	Dimensions	Tapping Centres	Output (W)	Output (BTU)	Element Size	Finish	Exc. VAT	Inc. VAT
PAR-5X10AN	500 x 1000mm	800	606	2068	400W*	Anthracite	£240.00	**£288.00**

**NOTE: This rail can be used with a 600W Element providing it is shorter than 500mm in length - See Ascent Terma Element on p381*

Siena & Palermo

5 YEAR MANUFACTURERS GUARANTEE

Central Heating Towel Rails in Anthracite Finish

Siena - Wall Projection: 150mm

Palermo - Wall Projection: 150mm

Siena Rail

Ref.	Dimensions	Tapping Centres	Output (W)	Output (BTU)	Element Size	Finish	Exc. VAT	Inc. VAT
SIE-12X5AN	1200 x 500mm	300	655	2236	600W	Anthracite	£282.00	**£338.40**

Palermo Rail

Ref.	Dimensions	Tapping Centres	Output (W)	Output (BTU)	Element Size	Finish	Exc. VAT	Inc. VAT
PAL-8X5AN	850 x 550mm	500	397	1353	400W	Anthracite	£197.00	**£236.40**

Salerno & Oslo

Central Heating Radiators in Anthracite Black Nickel Finishes

5 YEAR MANUFACTURERS GUARANTEE

The Salerno Radiator includes integrated Towel Hangers which heat up with the rail

Salerno 1600 x 420mm Rail
Wall Projection: 164mm

Oslo 1800 x 360 Rail
Wall Projection: 88mm

Salerno Rail

Ref.	Dimensions	Tapping Centres	Output (W)	Output (BTU)	Element Size	Finish	Exc. VAT	Inc. VAT
SAL-12X5AN	1200 x 542mm	542	785	2677	n/a	Anthracite	£322.00	**£386.40**
SAL-16X4AN	1600 x 420mm	420	814	2777	n/a	Anthracite	£276.00	**£331.20**

Oslo Rails

Ref.	Dimensions	Tapping Centres	Output (W)	Output (BTU)	Element Size	Finish	Exc. VAT	Inc. VAT
OS-18X3BN	1800 x 360mm	360	949	3239	n/a	Black Nickel	£452.00	**£542.40**
OS-18X4BN	1800 x 480mm	480	1266	4319	n/a	Black Nickel	£575.00	**£690.00**

Kansas

Central Heating Towel Rails - Available in both Chrome and Anthracite Finishes

Kansas with Mirror - Wall Projection: 116mm

Kansas in Anthracite Finish - Wall Projection: 89mm

Kansas in Chrome Finish - Wall Projection: 89mm

Kansas with Mirror

Ref.	Dimensions	Tapping Centres	Output (W)	Output (BTU)	Element Size	Finish	Exc. VAT	Inc. VAT
KCT-18X31	1800 x 381mm	381	1025	3496	n/a	Anthracite	£306.00	**£367.20**

Kansas

Ref.	Dimensions	Tapping Centres	Output (W)	Output (BTU)	Element Size	Finish	Exc. VAT	Inc. VAT
KCT-16X34	1600 x 342mm	342	778	2654	n/a	Anthracite	£187.00	**£224.40**
KAN-16X34	1600 x 342mm	342	648	2211	n/a	Chrome	£396.00	**£475.20**
KCT-18X22	1800 x 226mm	226	684	2335	n/a	Anthracite	£152.00	**£182.40**
KAN-18X22	1800 x 226mm	226	348	1186	n/a	Chrome	£287.00	**£344.40**

Kansas Towel Hangers

Desciption	Ref.	Finish	Exc. VAT	Inc. VAT
Towel Hanger for 342mm Wide Rail	TH342AN	Anthracite	£32.00	**£38.40**
Towel Hanger for 342mm Wide Rail	TH342CP	Chrome	£45.00	**£54.00**
Towel Hanger for 381mm Wide Rail	TH381AN	Anthracite	£34.00	**£40.80**

Kansas Horizontal

Central Heating Towel Rails in Anthracite & Chrome Finishes

5 YEAR MANUFACTURERS GUARANTEE

Kansas Horizontal Rail - Wall Projection: 86mm
Pictured in Anthracite Finish - Also Available in Chrome

Kansas Horizontal Rail - Anthracite

Ref.	Dimensions	Tapping Centres	Output (W)	Output (BTU)	Element Size	Finish	Exc. VAT	Inc. VAT
KCT-6X98AN	600 x 980mm	980	1030	3514	800W	Anthracite	£211.00	**£253.20**
KCT-6X12AN	600 x 1212mm	1212	1299	4432	800W	Anthracite	£288.00	**£345.60**

Kansas Horizontal Rail - Chrome

Ref.	Dimensions	Tapping Centres	Output (W)	Output (BTU)	Element Size	Finish	Exc. VAT	Inc. VAT
KAN-6X98CP	600 x 980mm	980	1028	3509	800W	Chrome	£388.00	**£465.60**
KAN-6X12CP	600 x 1212mm	1212	1271	4335	800W	Chrome	£467.00	**£560.40**

NOTE: 600 x 980mm Rails are supplied with 17 vertical bars
600 x 1212mm Rails are supplied with 21 vertical bars

Sofia

Anthracite Radiators - Available as both Horizontal & Vertical Options

Sofia 600 x 1203mm Rail
Wall Projection: 121mm

Sofia 1800 x 370 Rail - Wall Projection: 105mm

Sofia Horizontal Rail

Ref.	Dimensions	Tapping Centres	Output (W)	Output (BTU)	Element Size	Finish	Exc. VAT	Inc. VAT
SOF-6X12AN	600 x 1203mm	1203	1956	6675	n/a	Anthracite	£496.00	**£595.20**

Sofia Rail

Ref.	Dimensions	Tapping Centres	Output (W)	Output (BTU)	Element Size	Finish	Exc. VAT	Inc. VAT
SOF-16X37AN	1600 x 372mm	372	924	3152	n/a	Anthracite	£235.00	**£282.00**
SOF-18x37AN	1800 x 372mm	372	1679	5730	n/a	Anthracite	£260.00	**£312.00**

Roma & Monza

Central Heating Towel Rails

5 YEAR MANUFACTURERS GUARANTEE

Roma Rail - Wall Projection: 230mm

Monza Rail - Wall Projection: 230mm

Roma Rail

Ref.	Dimensions	Tapping Centres	Output (W)	Output (BTU)	Element Size	Finish	Exc. VAT	Inc. VAT
ROM-11X63	1100 x 630mm	453	970	3309	n/a	Chrome with White Radiator	£560.00	**£672.00**

Monza Rail

Ref.	Dimensions	Tapping Centres	Output (W)	Output (BTU)	Element Size	Finish	Exc. VAT	Inc. VAT
MON-11X63	1100 x 630mm	453	970	3309	n/a	Chrome with Anthracite Radiator	£560.00	**£672.00**

Venice & Venetian

Central Heating Towel Rails

Venice Rail
Chrome with Chrome Radiator
Wall Projection: 187mm

Venice Rail with Towel Shelf
- with White Radiator
Wall Projection of Towel Shelf: 260mm

Venetian Rail with Towel Shelf
Chrome with Anthracite Radiator
Wall Projection of Towel Shelf: 260mm

Venice Rail

Ref.	Dimensions	Tapping Centres	Output (W)	Output (BTU)	Element Size	Finish	Exc. VAT	Inc. VAT
VCP-14X55	1445 x 630mm	486	360	1227	300W	Chrome	£528.00	£633.60
VWH-14X55	1445 x 630mm	486	441	1503	400W	Chrome with White Radiator	£445.00	£534.00

Venice with Towel Shelf

Ref.	Dimensions	Tapping Centres	Output (W)	Output (BTU)	Element Size	Finish	Exc. VAT	Inc. VAT
VSW-15X63	1525 x 630mm	486	582	1985	400W	Chrome with White Radiator	£499.00	£598.80

Venetian with Towel Shelf

Ref.	Dimensions	Tapping Centres	Output (W)	Output (BTU)	Element Size	Finish	Exc. VAT	Inc. VAT
VEN-15X63	1525 x 630mm	486	582	1985	400W	Chrome with Anthracite Radiator	£499.00	£598.80

Florence Shelf & Tuscany

Central Heating Towel Rails

5 YEAR MANUFACTURERS GUARANTEE

Florence Chrome Rail
White Radiator
Wall Projection: 260mm

Tuscany Chrome Rail
Anthracite Radiator
Wall Projection: 260mm

Florence with Shelf

Ref.	Dimensions	Tapping Centres	Output (W)	Output (BTU)	Element Size	Finish	Exc. VAT	Inc. VAT
FSH-96X63	963 x 673mm	528	856	2922	400W	Chrome/White	£466.00	**£559.20**

Tuscany Rail

Ref.	Dimensions	Tapping Centres	Output (W)	Output (BTU)	Element Size	Finish	Exc. VAT	Inc. VAT
TUS-96X63	963 x 673mm	528	856	2922	400W	Chrome/Anthracite	£466.00	**£559.20**

Latina & Livorno

5 YEAR MANUFACTURERS GUARANTEE

Central Heating Towel Rails in Antique Copper Finish

Latina Rail
Wall Projection: 123mm

Livorno Rail
Wall Projection: 230mm

Latina Rail

Ref.	Dimensions	Tapping Centres	Output (W)	Output (BTU)	Element Size	Finish	Exc. VAT	Inc. VAT
LA-74X49AC	748 x 498mm	425	218	744	150W	Antique Copper	£379.00	**£454.80**

Livorno Rail

Ref.	Dimensions	Tapping Centres	Output (W)	Output (BTU)	Element Size	Finish	Exc. VAT	Inc. VAT
LI-96X67AC	963 x 673mm	528	729	2488	400W	Antique Copper	£518.00	**£621.60**

Traditional Antique Copper Radiator Valves (Pair) - Angled Only

Ref: RV-XANGAC

£46.00 Exc. VAT **£55.20 Inc. VAT**

IMPORTANT NOTE: Can only be used with Standard Elements - NOT suitable for use with Programmable Electric Elements

Traditional Rails

5 YEAR MANUFACTURERS GUARANTEE

Florence Chrome Rail - White Radiator
Wall Projection: 230mm

Mini Florence Chrome Rail - White Radiator
Wall Projection: 230mm

Leo Rail - White
Wall Projection: 230mm

Traditional Radiator Valves (Pair)
Angled or Straight *(shown Angled)*

Ref: RV/V710 / 707 Finish: Chrome

£42.00 Exc. VAT **£50.40 Inc. VAT**

Florence	Dimensions	Tapping Centres	Output (W)	Output (BTU)	Element Size	Finish	Exc. VAT	Inc. VAT
TR02-8	965 x 675mm	528	560	1912	400W	Chrome/White	£411.00	**£493.20**
Mini Florence								
TR02-5	965 x 540mm	393	406	1385	400W	Chrome/White	£361.00	**£433.20**
Leo White								
TR01W-6	952 x 683mm	528	301	1770	250W	Chrome/White	£336.00	**£403.20**

IMPORTANT NOTE: Can only be used with Standard Elements - NOT suitable for use with Programmable Electric Elements

Traditional Rails

5 YEAR MANUFACTURERS GUARANTEE

Vienna Black Nickel Rail
Wall Projection: 230mm

Pisa Rail - Wall Projection: 228mm

Traditional Black Nickel Radiator Valves (Pair) - Angled Only

Ref: RV-XANGBN

£50.00 Exc. VAT **£60.00 Inc. VAT**

CONVERSION OPTIONS
ALL ELECTRIC
DUAL FUEL

Napoli Chrome Rail
Wall Projection: 295mm

CONVERSION OPTIONS
ALL ELECTRIC
DUAL FUEL

Ravenna Chrome Rail
Wall Projection: 154mm

CONVERSION OPTIONS
ALL ELECTRIC
DUAL FUEL

Rimini Chrome Rail
Wall Projection: 230mm

	Dimensions	Tapping Centres	Output (W)	Output (BTU)	Element Size	Finish	Exc. VAT	Inc. VAT
Vienna								
VI-96X67BN	963 x 673mm	528	560	1912	400W	Black Nickel/White	£515.00	**£618.00**
Pisa								
PIS-77X68	778 x 683mm	535	332	1133	250W	Chrome	£512.00	**£614.40**
Napoli								
NAP45X60	450 x 600mm	527	137	468	150W	Chrome	£303.00	**£363.60**
Ravenna								
TR03-C	967 x 673mm	530	138	470	150W	Chrome	£249.00	**£298.80**
Rimini								
RIM95X60	950 x 600mm	455	201	685	150W	Chrome	£326.00	**£391.20**

IMPORTANT NOTE: Can only be used with Standard Elements - NOT suitable for use with Programmable Electric Elements

QX BATHROOM PRODUCTS

A Division of Qualitex Supplies

Terms & Conditions

1. Claims for shortages or non-delivery of goods must be made within 24-hours of receipt, otherwise claims cannot be entertained.

2. All products must be carefully checked prior to installation, as installation is considered as acceptance of quality, size, style and specification.

3. In the event of a guarantee claim relating to the performance of the product, the liability of Qualitex is limited to replacing the product supplied and does not extend to consequential loss or damage arising from a defective product or installation.

4. All prices and specification details are subject to change without prior notice. Photographic sets will sometimes include props and only the items listed are included in the price quoted.

5. All orders are accepted subject to availability and all delivery dates are approximate. No liability for failure to supply can be accepted by Qualitex Supplies or our Showrooms.

6. Qualitex guarantees to replace any faulty products free of charge within 12 months of purchase following inspection and with presentation of proof of purchase (subject to terms)

7. All product guarantees are subject to our full terms and conditions of sale and requires installation by a suitably qualified installer in accordance with the fitting instructions.

8. The product guarantee will be invalid if it has been modified, misused, neglected, wilfully or accidentally damaged or not maintained, cleaned or cared for.

9. The guarantee applies to the original purchaser only and is not transferable without agreement in writing.

10. Exclusions & conditions apply to most Lifetime Guarantees.

11. Do not allow bathroom furniture to be subjected to direct contact with liquids including water splashes without drying off the surface.

12. Measurements are generally shown in mm
- **Furniture**: width x depth/projection x height
- **Baths**: width x depth/projection x height
- **Enclosures**: width x height
- **Basins**: width x depth
- **Mirrors/Cabinets**: width x depth/projection x height
- **Towel Rails**: height x width
- **Accessories**: width x depth/projection x height

Centralised Sales & Customer Service Department

Tel: 01622 79 00 11 • Fax: 01622 79 00 22

Spares & After-Sales Service Hotline: 01622 79 39 67

To ensure any spares requests are dealt with quickly and efficiently, please contact our After Sales Service Manager direct.

NOTE: QX images must not be used without written approval and specific terms agreed.

Colour Disclaimer: Actual product colours may vary due to the many variations in print reproduction, set lighting, monitors and browsers. We try to edit our images to show our products as accurately as possible, but please understand the actual colour may vary slightly. We cannot guarantee that the colour you see accurately portrays the true colour of the product.

www.qxbathrooms.co.uk and **www.qualitex.co.uk**

South & West

Qualitex Supplies Ltd
Units 3A & 3B, Deacon Trading Estate
Aylesford
Maidstone
Kent, ME20 7SP

North / Midlands / Wales / Scotland

Qualitex Supplies Ltd
Units 1A & 1B
Oddicroft Lane
Sutton-in-Ashfield
Nottinghamshire, NG17 5FS

Centralised Sales & Customer Service Department

Tel: 01622 79 00 11 • Fax: 01622 79 00 22

QUALITY GUARANTEE

Proud Supporters Of

SarcoidosisUK